PRO-FORM®
500 ZLE

Model No. PFEVEL95910.1
Serial No. _____

Write the serial number in the space above for reference.

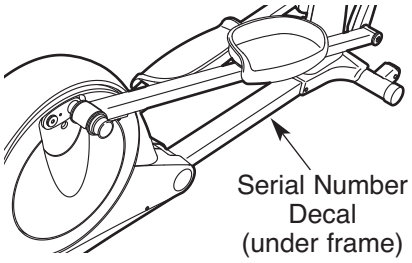

QUESTIONS?

If you have questions, or if there are missing parts, please contact us:

UK
Call: 08457 089 009
From Ireland: 053 92 36102

Website: www.iconsupport.eu
E-mail: csuk@iconeurope.com

Write:
ICON Health & Fitness, Ltd.
c/o HI Group PLC
Express Way
Whitwood, West Yorkshire
WF10 5QJ
UK

AUSTRALIA
Call: 1-800-237-173
E-mail:
australiacc@iconfitness.com

⚠ CAUTION

Read all precautions and instructions in this manual before using this equipment. Keep this manual for future reference.

USER'S MANUAL

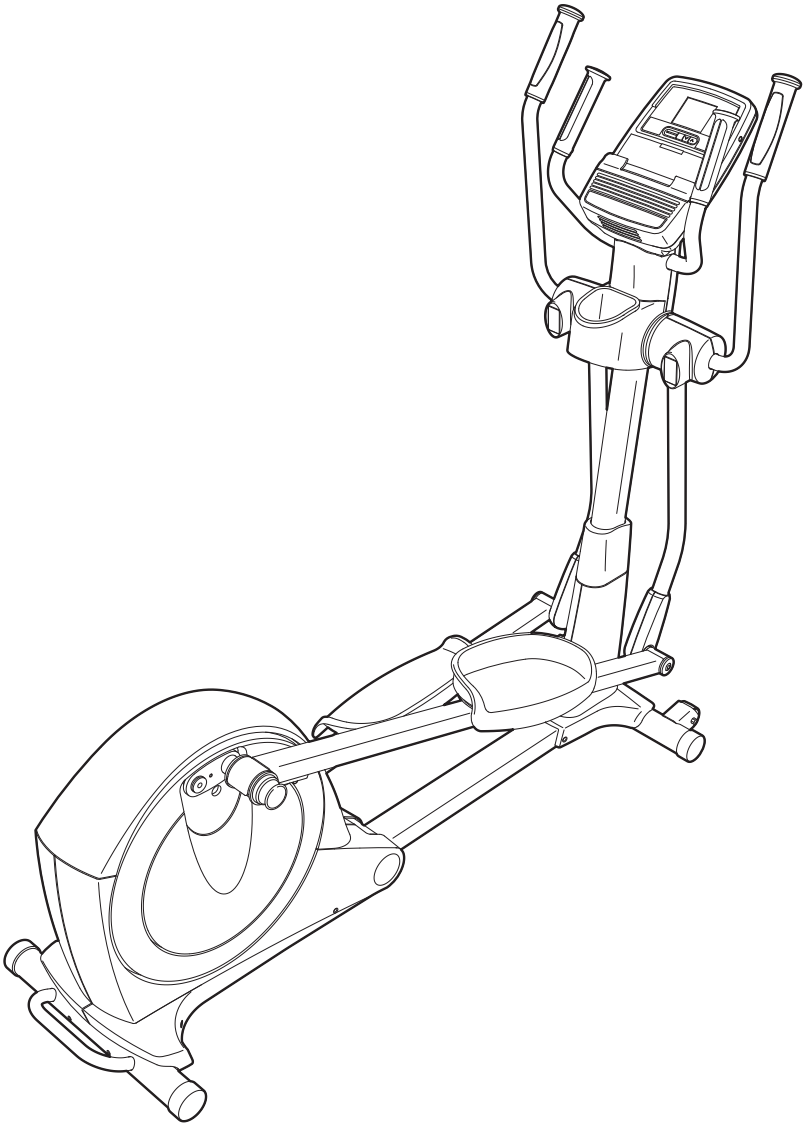

www.iconeurope.com

TABLE OF CONTENTS

WARNING DECAL PLACEMENT 2
IMPORTANT PRECAUTIONS 3
BEFORE YOU BEGIN 4
ASSEMBLY 5
HOW TO USE THE ELLIPTICAL 14
MAINTENANCE AND TROUBLESHOOTING 23
EXERCISE GUIDELINES 25
PART LIST 28
EXPLODED DRAWING 30
ORDERING REPLACEMENT PARTS . . . . . Back Cover
RECYCLING INFORMATION . . . . . Back Cover

WARNING DECAL PLACEMENT

This drawing shows the location(s) of the warning decal(s). **If a decal is missing or illegible, see the front cover of this manual and request a free replacement decal. Apply the decal in the location shown.** Note: The decal(s) may not be shown at actual size.

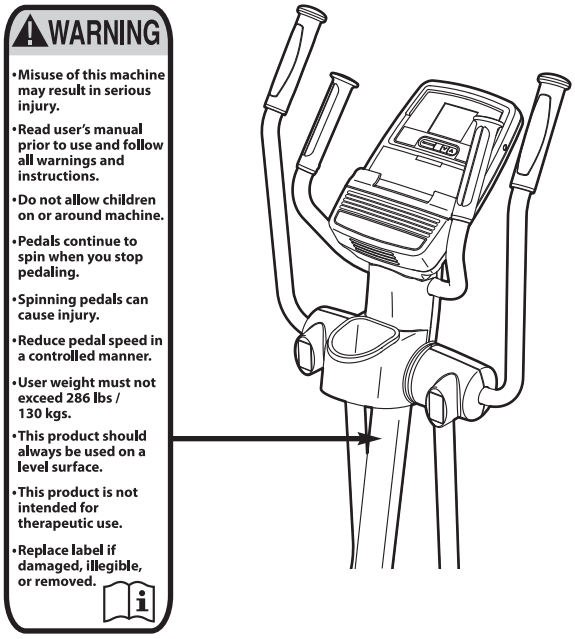

PROFORM is a registered trademark of ICON IP, Inc.

IMPORTANT PRECAUTIONS

⚠WARNING: To reduce the risk of serious injury, read all important precautions and instructions in this manual and all warnings on your elliptical before using your elliptical. ICON assumes no responsibility for personal injury or property damage sustained by or through the use of this product.

1. **Before beginning any exercise program, consult your physician. This is especially important for persons over age 35 or persons with pre-existing health problems.**
2. **Use the elliptical only as described in this manual.**
3. **It is the responsibility of the owner to ensure that all users of the elliptical are adequately informed of all precautions.**
4. **The elliptical is intended for home use only. Do not use the elliptical in a commercial, rental, or institutional setting.**
5. **Keep the elliptical indoors, away from moisture and dust. Do not put the elliptical in a garage or covered patio, or near water.**
6. **Place the elliptical on a level surface, with at least 3 ft. (0.9 m) of clearance in the front and rear of the elliptical and 2 ft. (0.6 m) on each side. To protect the floor or carpet from damage, place a mat under the elliptical.**
7. **Inspect and properly tighten all parts regularly. Replace any worn parts immediately.**
8. **Keep children under age 12 and pets away from the elliptical at all times.**
9. **The elliptical should not be used by persons weighing more than 286 lbs. (130 kg).**
10. **Wear appropriate clothes while exercising; do not wear loose clothes that could become caught on the elliptical. Always wear athletic shoes for foot protection while exercising.**
11. **Hold the handlebars or the upper body arms when mounting, dismounting, or using the elliptical.**
12. **The pulse sensor is not a medical device. Various factors may affect the accuracy of heart rate readings. The pulse sensor is intended only as an exercise aid in determining heart rate trends in general.**
13. **The elliptical does not have a freewheel; the pedals will continue to move until the flywheel stops. Reduce your pedaling speed in a controlled way.**
14. **Keep your back straight while using the elliptical; do not arch your back.**
15. **Over exercising may result in serious injury or death. If you feel faint or if you experience pain while exercising, stop immediately and cool down.**

BEFORE YOU BEGIN

Thank you for selecting the revolutionary PROFORM® 500 ZLE elliptical. The 500 ZLE elliptical provides an impressive selection of features designed to make your workouts at home more effective and enjoyable.

For your benefit, read this manual carefully before you use the elliptical. If you have questions after reading this manual, please see the front cover of this manual. To help us assist you, note the product model number and serial number before contacting us. The model number and the location of the serial number decal are shown on the front cover of this manual.

Before reading further, please familiarize yourself with the parts that are labeled in the drawing below.

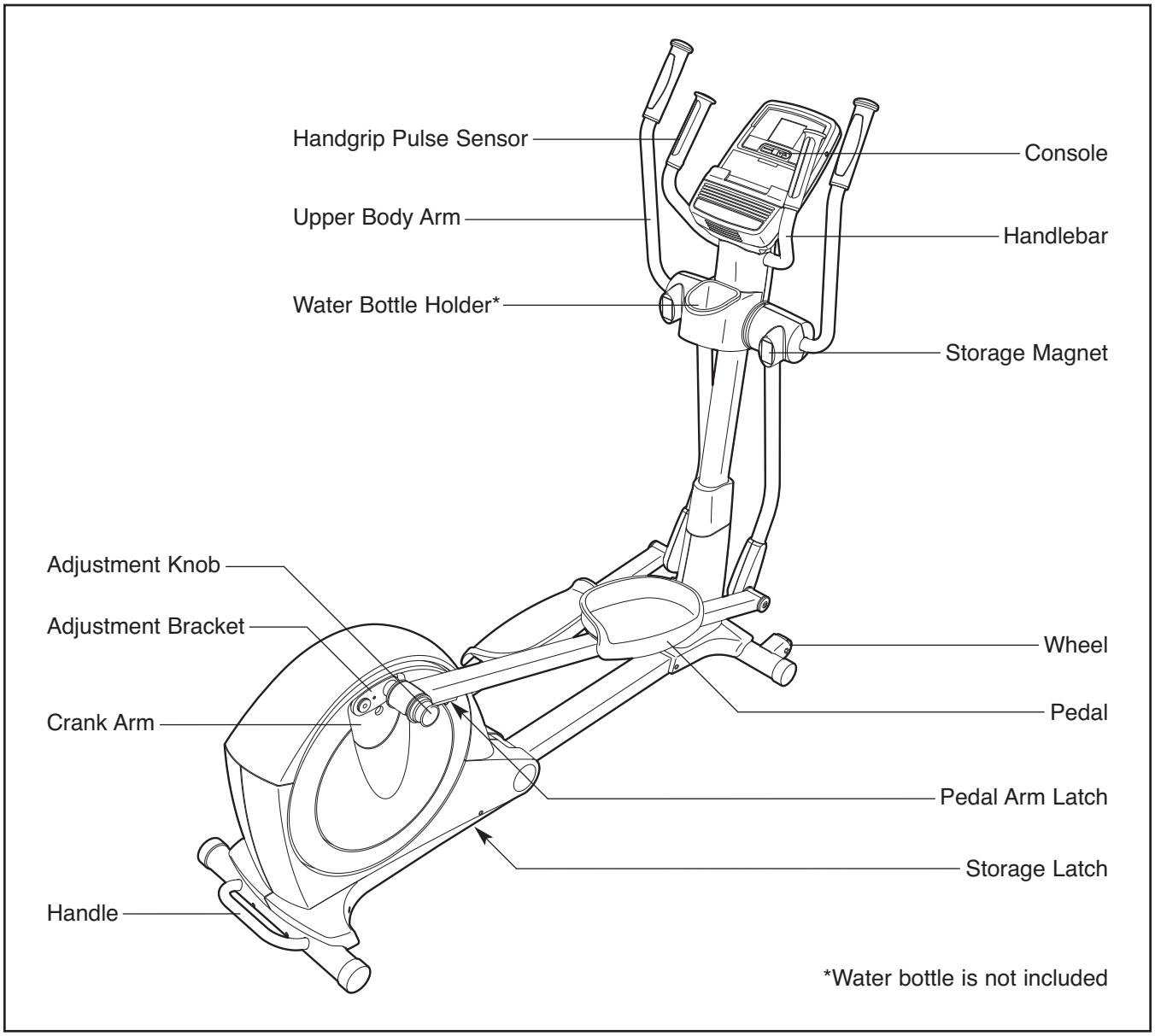

ASSEMBLY

Assembly requires two persons. Place all parts of the elliptical in a cleared area and remove the packing materials. Do not dispose of the packing materials until assembly is completed.

In addition to the included tool(s), assembly requires a Phillips screwdriver and a rubber mallet .

See the drawings below to identify the small parts needed for assembly. The number in parentheses below each drawing is the key number of the part, from the PART LIST near the end of this manual. The number following the key number is the quantity needed for assembly. **Note: If a part is not in the hardware kit, check to see if it has been preassembled. To avoid damaging parts, do not use power tools for assembly.**

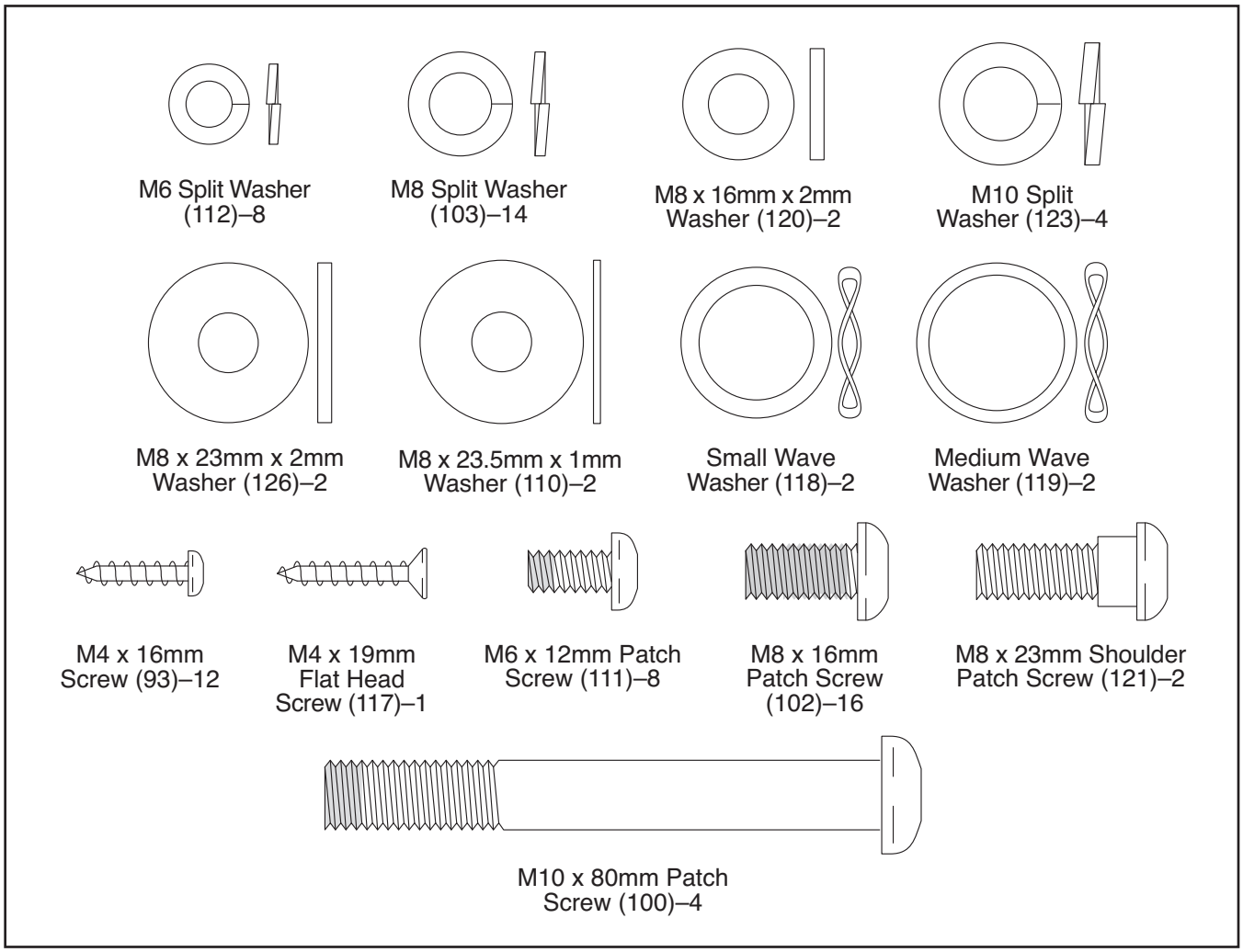

1. **To make assembly easier, read the information on page 5 before you begin.**

Identify the Front Stabilizer (3), and orient it as shown.

While another person lifts the Frame (1), attach the Front Stabilizer (3) to the Frame with two M10 x 80mm Patch Screws (100) and two M10 Split Washers (123).

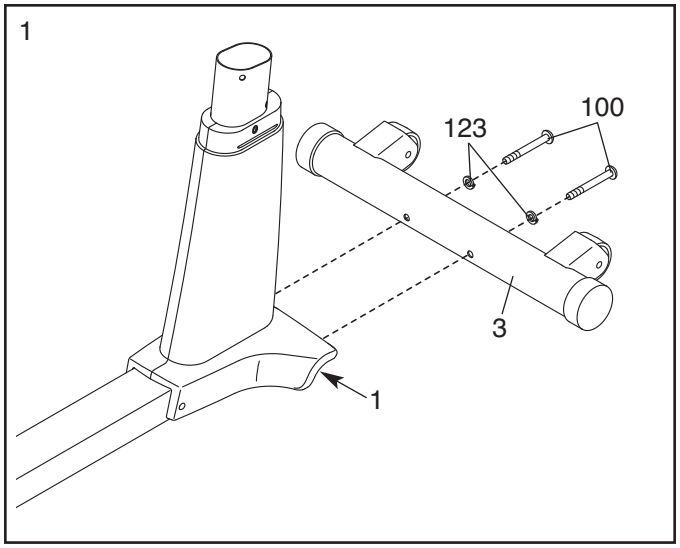

2. Identify the Rear Stabilizer (4), and orient it as shown.

While another person lifts the Folding Frame (2), attach the Rear Stabilizer (4) to the Folding Frame with two M10 x 80mm Patch Screws (100) and two M10 Split Washers (123).

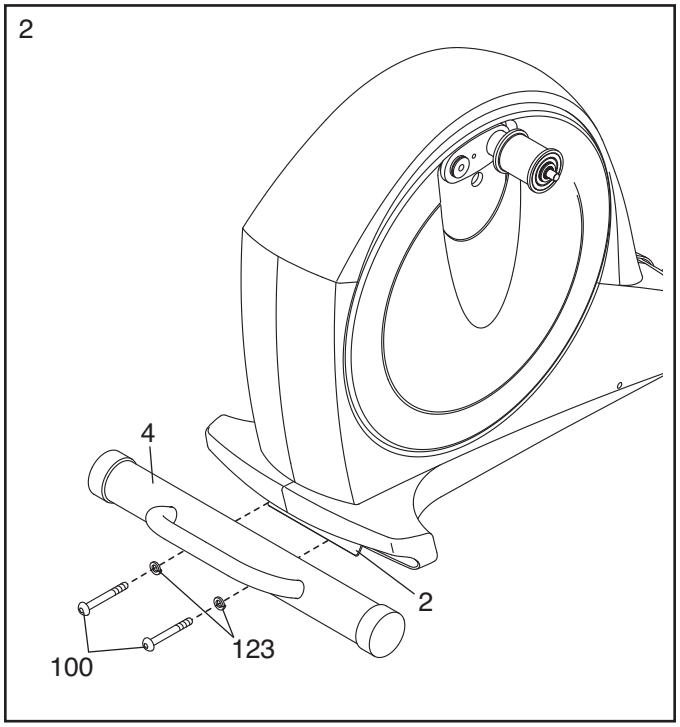

3. Orient the Upright (5) and the Top Cover (23) as shown. Slide the Top Cover upward onto the Upright.

   Have a second person hold the Upright (5) and the Top Cover (23) near the Frame (1).

   See the inset drawing. Find the wire tie in the Upright (5). Tie the lower end of the wire tie to the Wire Harness (60). Next, pull the upper end of the wire tie until the Wire Harness is routed through the Upright. Then, discard the wire tie.

   Tip: To prevent the Wire Harness (60) from falling into the Upright (5), secure the Wire Harness with a rubber band or tape.

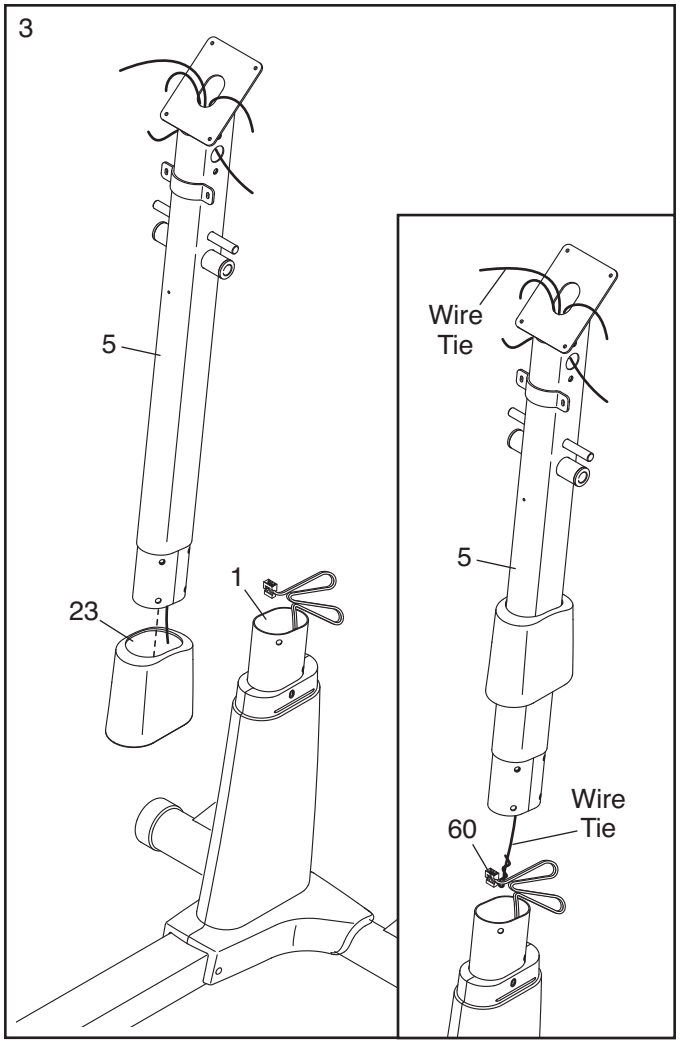

4. **Tip: Avoid pinching the Wire Harness (60).** Insert the Upright (5) into the Frame (1).

   Attach the Upright (5) with four M8 x 16mm Patch Screws (102) and four M8 Split Washers (103). **Do not tighten the Patch Screws yet.**

   Slide the Top Cover (23) downward. **Do not press the Top Cover over the Frame (1) yet.**

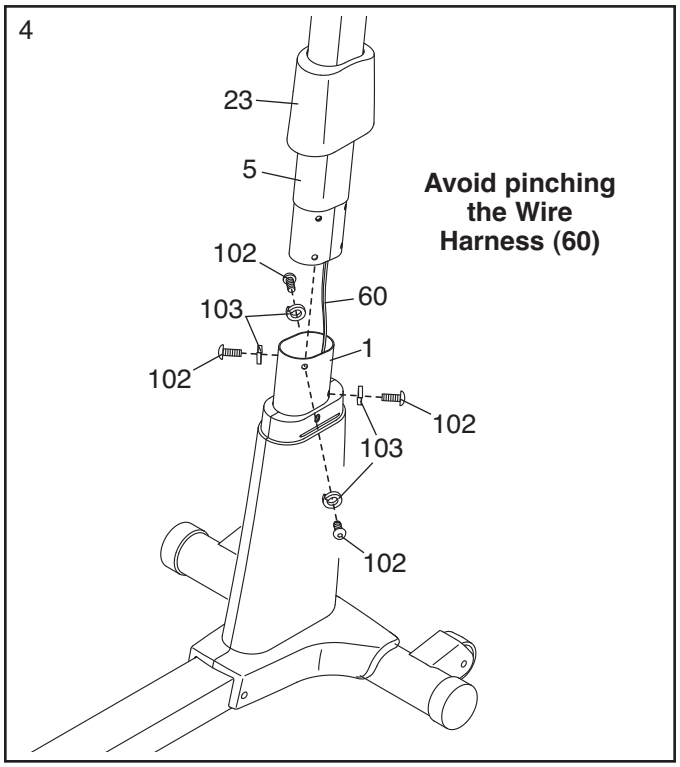

5. Apply a generous amount of the included grease to the Upright Axle (48) and to two Small Wave Washers (118).

   Insert the Upright Axle (48) into the Upright (5) and center it. Slide a Small Wave Washer (118) onto each end of the Upright Axle.

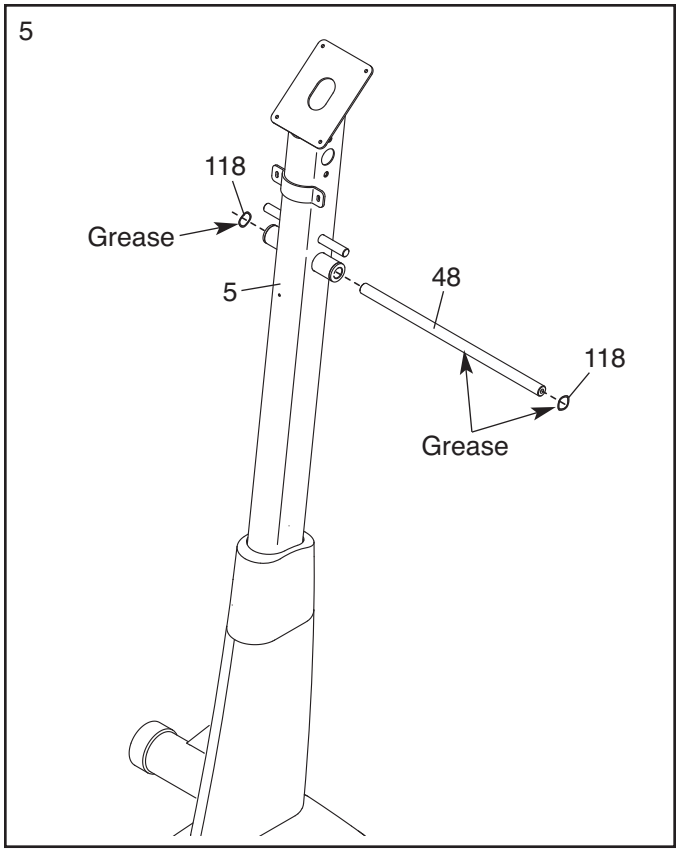

6. Identify the Right and Left Upper Body Legs (6, 7), which are marked with “Right” and “Left” stickers, and orient them as shown.

   Slide the Right and Left Upper Body Legs (6, 7) onto the Upright Axle (48).

   Tighten two M8 x 16mm Patch Screws (102) with M8 x 23mm x 2mm Washers (126) into the Upright Axle (48) at the same time. **Firmly tighten the Patch Screws.**

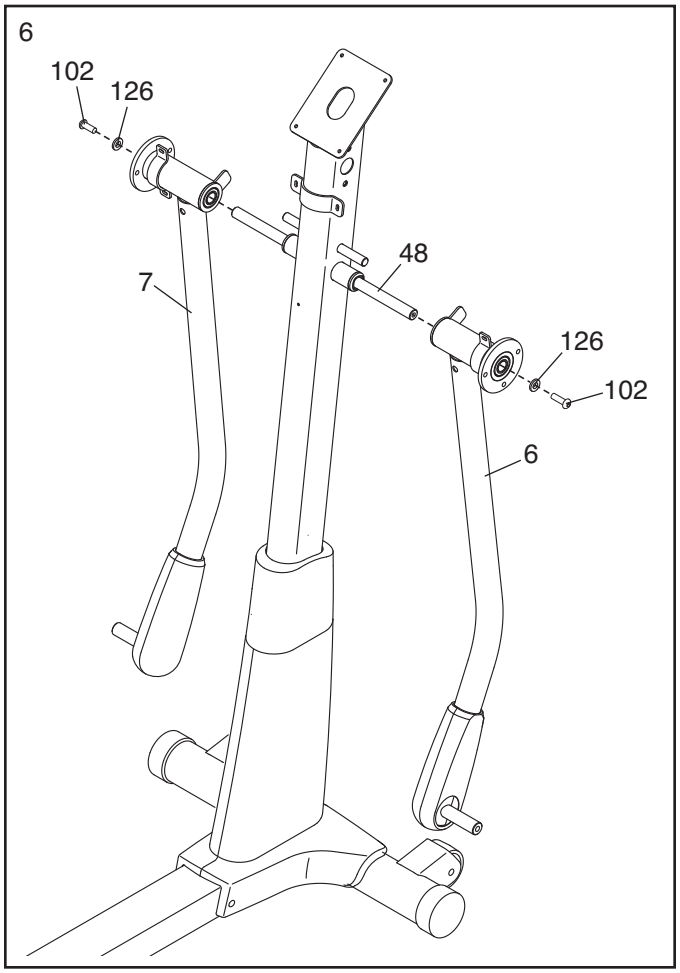

7. Apply grease to the axle on the Right Upper Body Leg (6) and to a Medium Wave Washer (119).

   Orient a Leg Spacer (55) so that the flat side is facing away from the elliptical. Slide the Leg Spacer and the Medium Wave Washer (119) onto the Right Upper Body Leg (6).

   Identify the Right Pedal Arm (12), which is marked with a “Right” sticker, and orient it as shown. Slide the Right Pedal Arm onto the Right Upper Body Leg (6).

   Attach the Right Pedal Arm (12) with an M8 x 23mm Shoulder Patch Screw (121), an M8 x 16mm x 2mm Washer (120), an Axle Cover (56), and an M8 x 23.5mm x 1mm Washer (110).

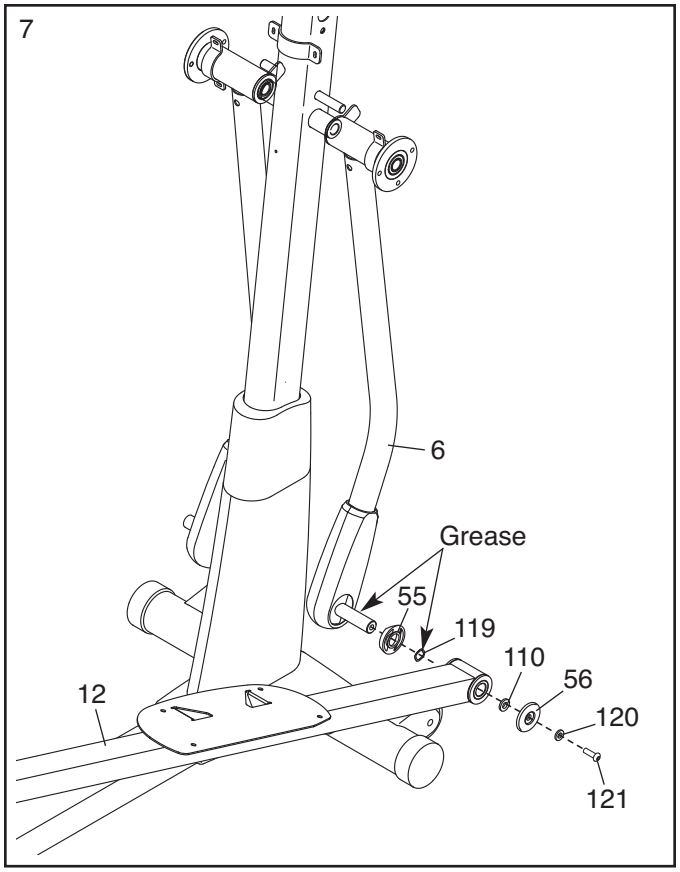

8. Press the Right Pedal Arm (12) onto the right Adjustment Sleeve (46). **Make sure that the Right Pedal Arm latches into place.**

   Tighten an Adjustment Knob (45) onto the right Adjustment Pin (44).

   Repeat step 7 and this step on the other side of the elliptical.

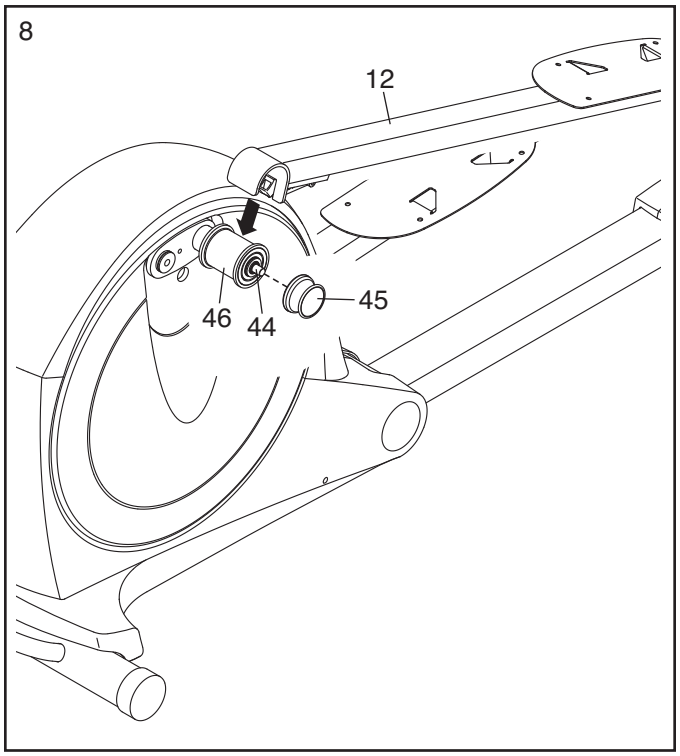

9. Identify the Right Pedal (14), which is marked with a “Right” sticker, and orient it as shown.

   Attach the Right Pedal (14) to the Right Pedal Arm (12) with four M6 x 12mm Patch Screws (111) and four M6 Split Washers (112).

   Attach the Left Pedal (15) to the Left Pedal Arm (13) in the same way.

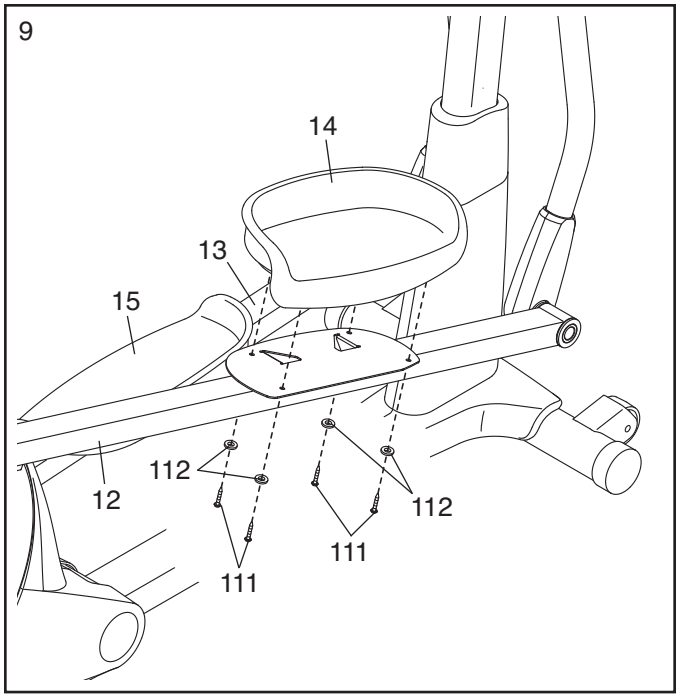

10. Identify the Right Upper Body Arm (8), which is marked with a “Right” sticker, and orient it as shown.

    Attach the Right Upper Body Arm (8) to the Right Upper Body Leg (6) with three M8 x 16mm Patch Screws (102) and three M8 Split Washers (103).

    Attach the Left Upper Body Arm (9) to the Left Upper Body Leg (7) in the same way.

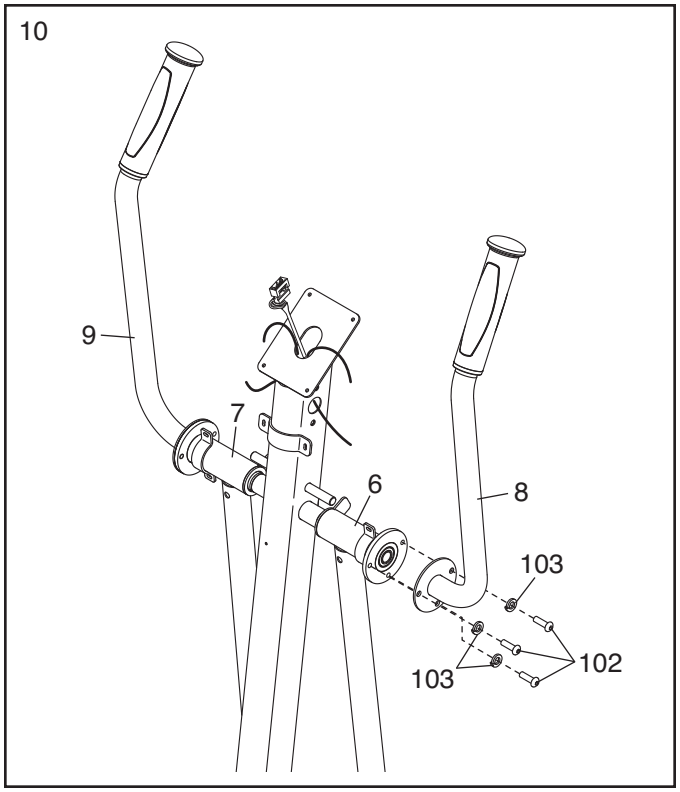

11. Identify the Right Handlebar (10), which is marked with a “Right” sticker, and orient it as shown.

Have a second person hold the Right Handlebar (10) near the right side of the Upright (5).

Locate the indicated wire tie in the Upright (5). Tie the lower end of the wire tie to the Pulse Wire (34) inside the Right Handlebar (10). Next, pull the upper end of the wire tie upward out of the top of the Upright. Then, untie and discard the wire tie.

Tip: Avoid pinching the Pulse Wire (34). Attach the Right Handlebar (10) to the Upright (5) with two M8 x 16mm Patch Screws (102) and two M8 Split Washers (103).

Attach the Left Handlebar (11) in the same way.

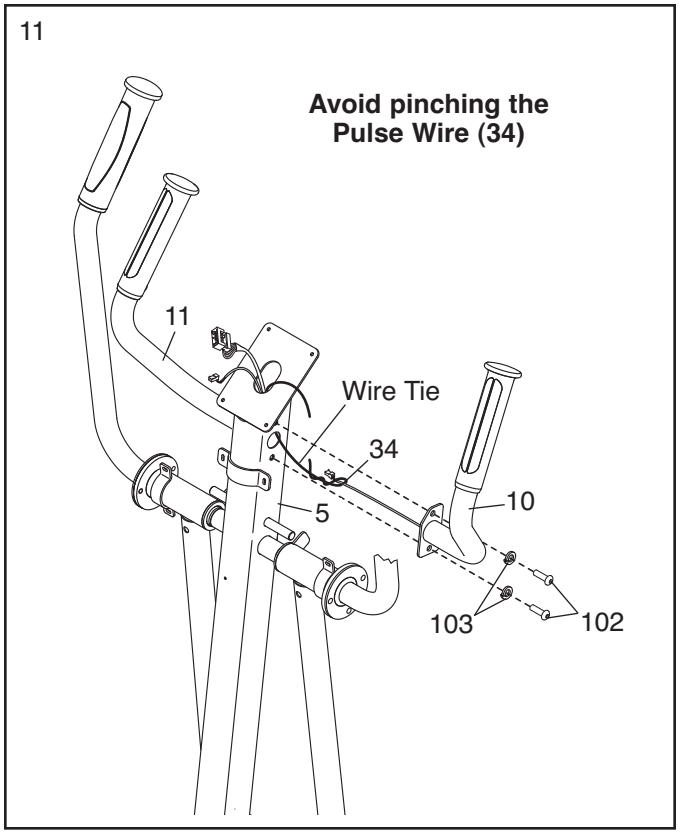

12. The Console (33) can use four D batteries (not included); alkaline batteries are recommended. **IMPORTANT: If the Console has been exposed to cold temperatures, allow it to warm to room temperature before inserting batteries. Otherwise, you may damage the console displays or other electronic components.** Remove the screw, remove the battery cover, insert batteries into the battery compartment, and reattach the battery cover. **Make sure to orient the batteries as shown by the diagram inside the battery compartment.**

To purchase an optional power adapter, call the telephone number on the front cover of this manual. To avoid damaging the console, use only a manufacturer-supplied power adapter. Remove the battery cover, remove the batteries, and plug one end of the power adapter into the jack inside the battery compartment. Plug the other end into an outlet that is installed in accordance with all local codes and ordinances. Route the wire on the power adapter through the slot in the battery cover, and reattach the battery cover.

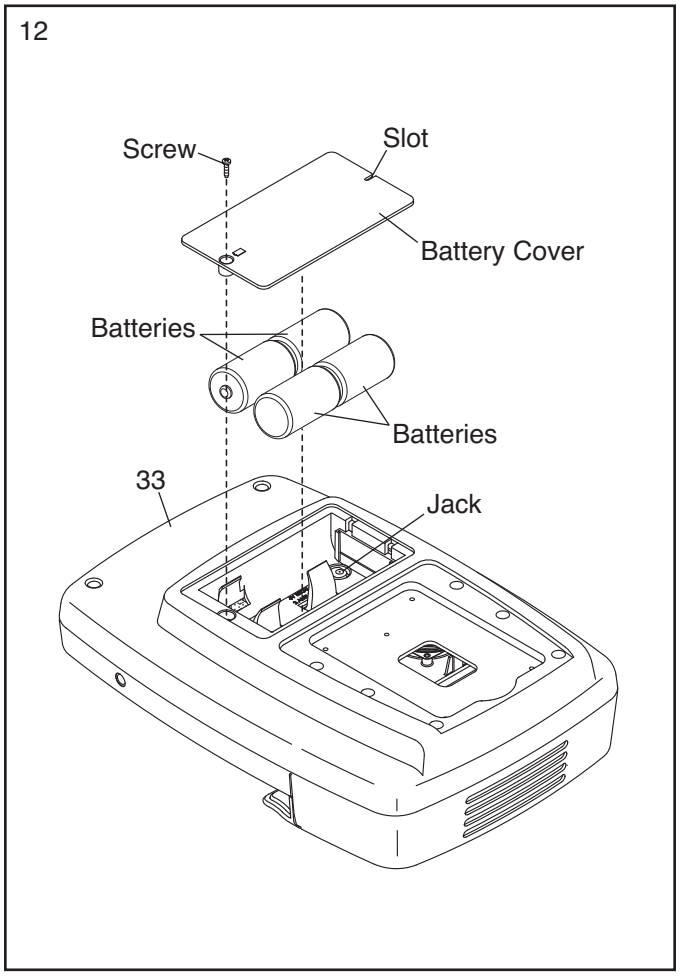

13. While a second person holds the Console (33) near the Upright (5), connect the console wires to the Wire Harness (60) and to the Pulse Wires (34).

    Insert the excess wire into the Console (33).

    Tip: Avoid pinching the wires. Attach the Console (33) to the Upright (5) with four M4 x 16mm Screws (93).

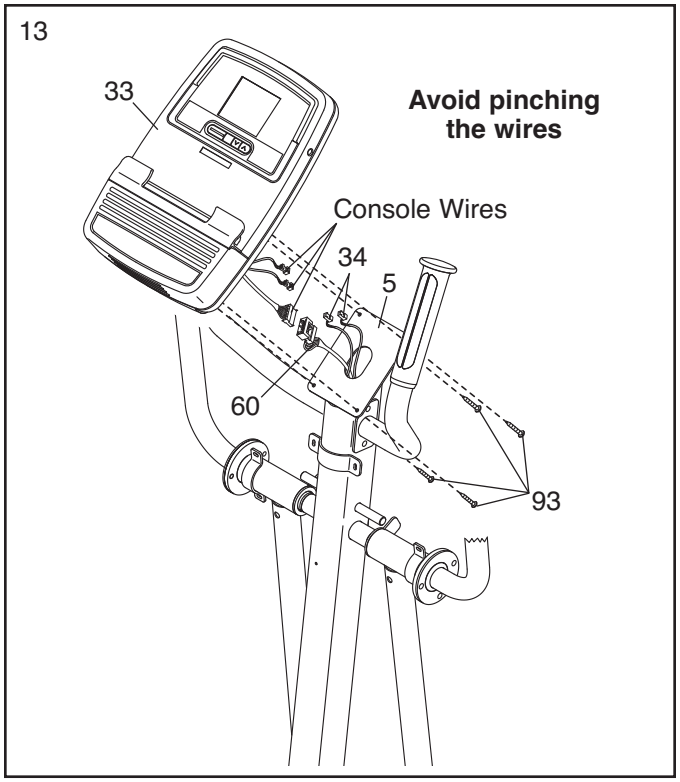

14. Attach the Rear Upright Cover (24) to the Upright (5) with two M4 x 16mm Screws (93) and an M4 x 19mm Flat Head Screw (117).

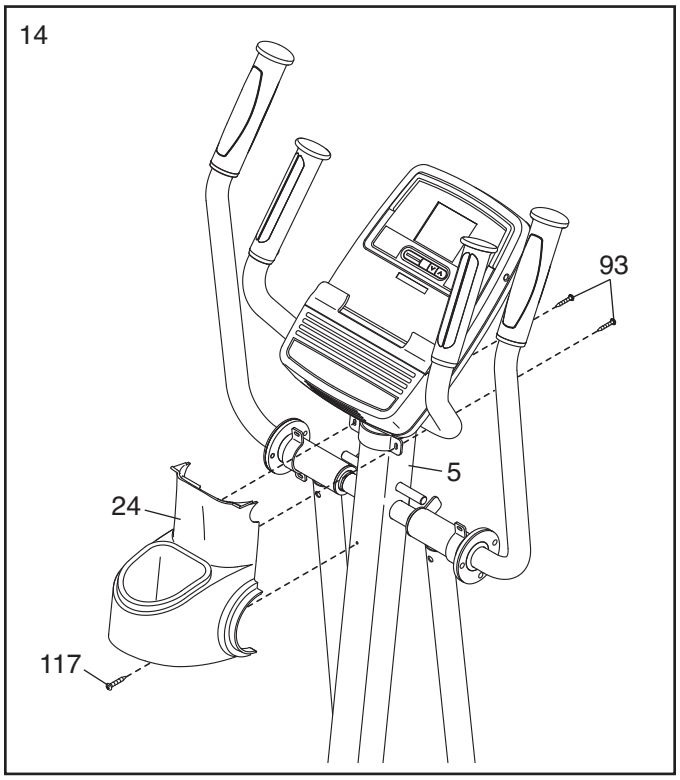

15. Attach the Front Upright Cover (25) around the Upright (5) by pressing the tabs on the Front Upright Cover into the Rear Upright Cover (24).

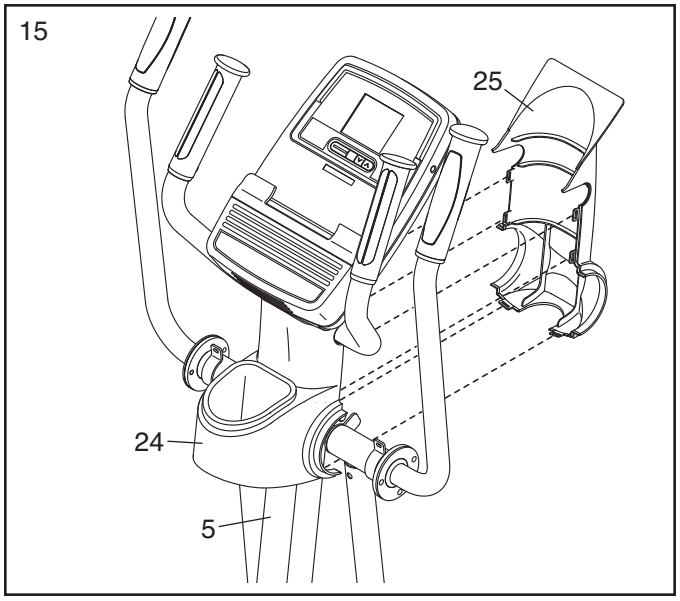

16. Identify the Right Rear and Front Leg Covers (29, 30), which are marked with “Right” stickers.

    Attach the Right Rear Leg Cover (29) to the Right Upper Body Leg (6) with three M4 x 16mm Screws (93).

    Attach the Right Front Leg Cover (30) around the Right Upper Body Leg (6) by pressing the tabs on the Right Front Leg Cover into the Right Rear Leg Cover (29).

    Attach the Left Rear and Front Leg Covers (31, 32) in the same way.

    See step 4. Tighten the four M8 x 16mm Patch Screws (102).

    Then, slide the Top Cover (23) downward and press it over the Frame (1).

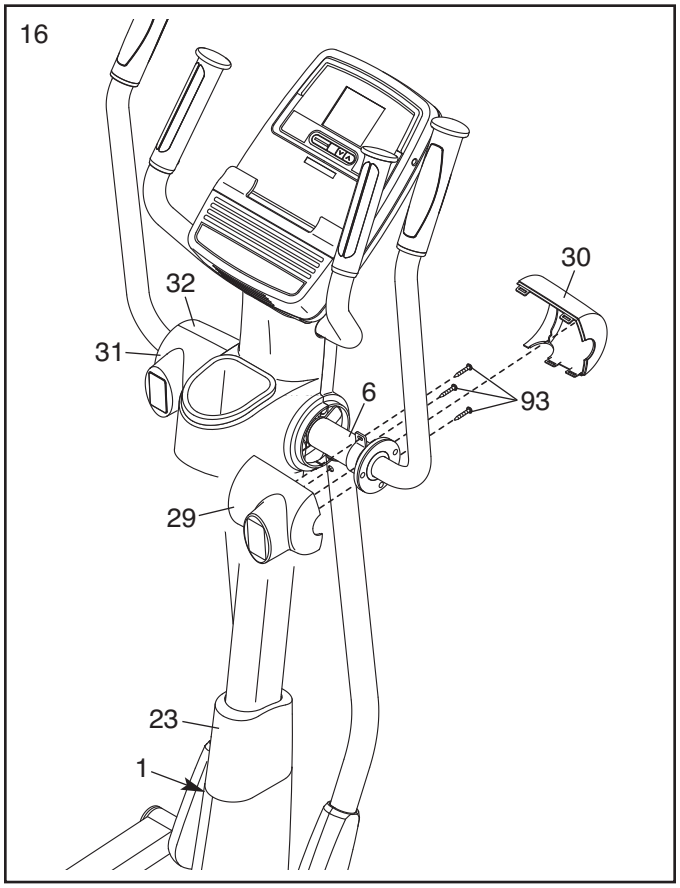

17. **Make sure that all parts of the elliptical are properly tightened.** Note: Some hardware may be left over after assembly is completed. To protect the floor or carpet from damage, place a mat under the elliptical.

HOW TO USE THE ELLIPTICAL

HOW TO FOLD AND UNFOLD THE ELLIPTICAL

When the elliptical is not in use, the frame can be folded out of the way. First, lift the latch under each pedal arm, and lift the pedal arms off the adjustment sleeves on the crank arms.

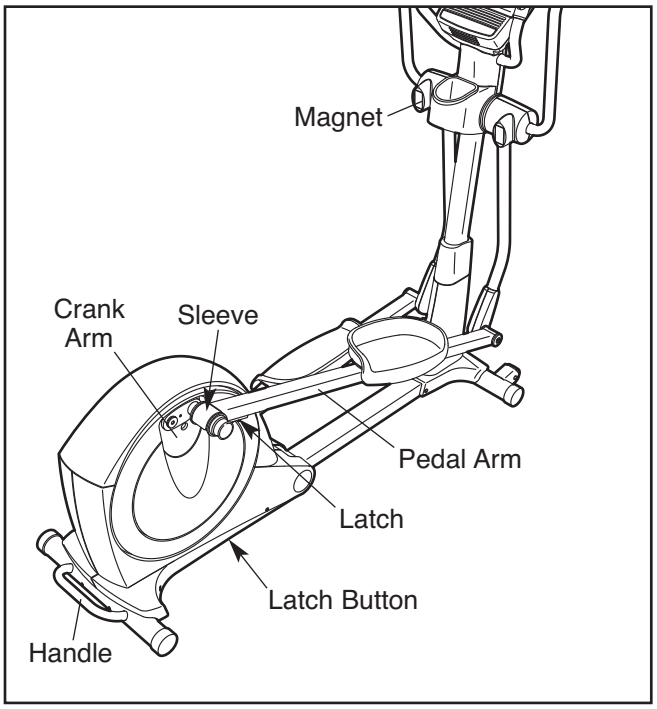

Next, raise the pedal arms until they touch the magnets on the upper body legs; the magnets will hold the pedal arms in place. Then, hold the handle and lift the frame until it locks in a vertical position.

To use the elliptical, first hold the handle, press the latch button, and lower the frame.

Next, pull the pedal arms off the magnets on the upper body legs. Then, **lift the latches under the pedal arms,** and set the pedal arms on the adjustment sleeves on the crank arms. Release the latches, and make sure that the pedal arms are securely connected to the adjustment sleeves.

HOW TO MOVE THE ELLIPTICAL

To move the elliptical, first fold it as described at the left. Next, stand in front of the elliptical, hold the upright, and place one foot against one of the wheels. Pull the upright until the elliptical rolls on the front wheels. Carefully move the elliptical to the desired position, and then lower it.

HOW TO ADJUST THE STRIDE LENGTH OF THE ELLIPTICAL

To adjust the stride length of the elliptical, first pull one of the adjustment knobs until the adjustment arm pivots freely. Pivot the adjustment arm until the adjustment knob is aligned with one of the holes in the crank arm, and gently release the knob into the hole.

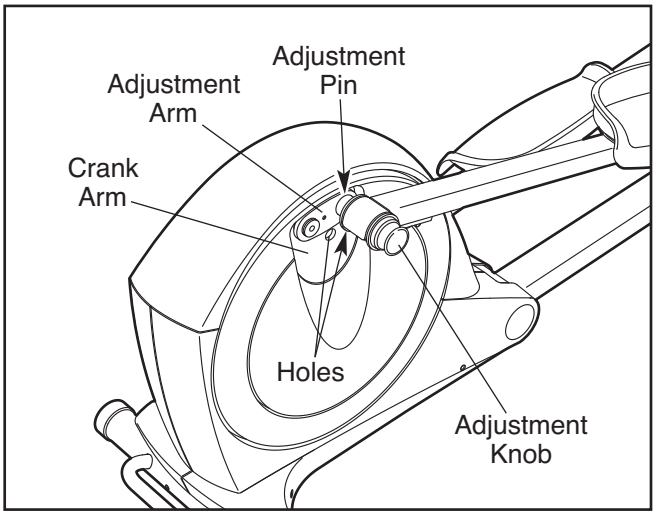

Pivot the adjustment arm back and forth slightly to make sure that the adjustment pin is engaged in one of the holes in the crank arm.

Adjust the stride length on the other side of the elliptical in the same way. **Make sure that both sides of the elliptical are adjusted to the same stride length.**

HOW TO EXERCISE ON THE ELLIPTICAL

To mount the elliptical, hold the upper body arms or the handlebars and step onto the pedal that is in the lowest position. Next, step onto the other pedal. Push the pedals until they begin to move with a continuous motion. **Note: The crank arms can turn in either direction. It is recommended that you turn the crank arms in the direction shown by the arrow; however, for variety, you can turn the crank arms in the opposite direction.**

To dismount the elliptical, wait until the pedals come to a complete stop. **Note: The elliptical does not have a freewheel; the pedals will continue to move until the flywheel stops.** When the pedals are stationary, step off the highest pedal first. Then, step off the lowest pedal.

HOW TO ELIMINATE FLEXING IN THE CENTER OF THE ELLIPTICAL

If the elliptical flexes in the center during use, turn the leveling foot under the center of the frame until the flexing is eliminated.

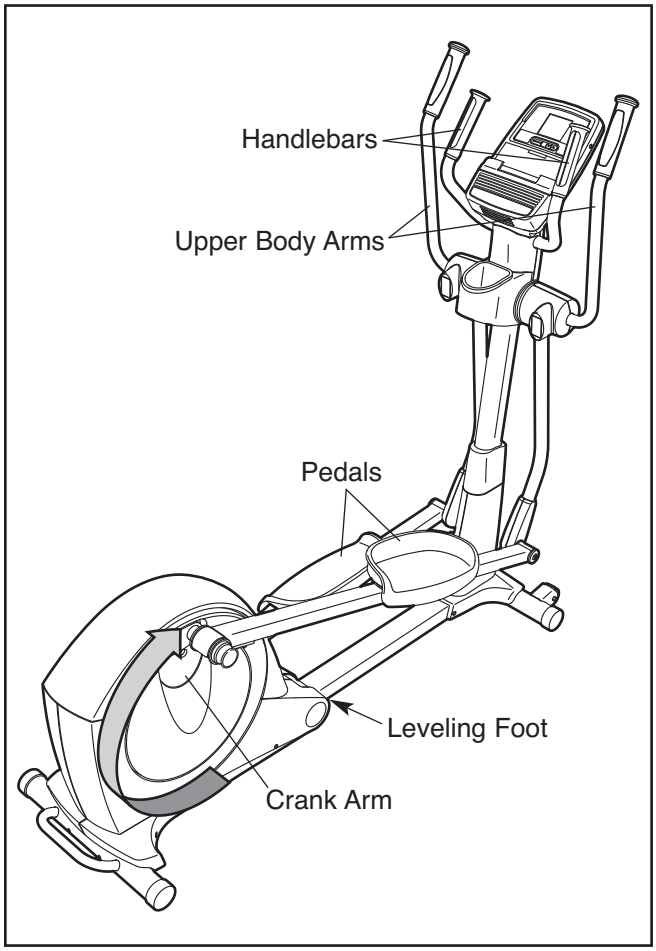

CONSOLE DIAGRAM

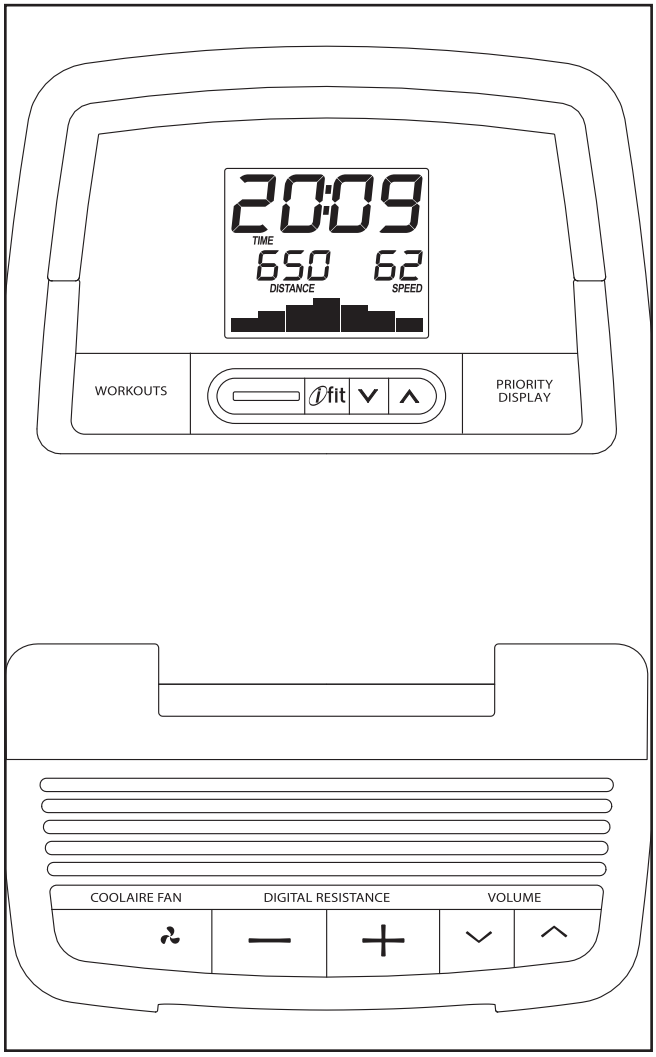

FEATURES OF THE CONSOLE

This console offers an array of features designed to make your workouts more effective and enjoyable.

The manual mode of the console allows you to change the resistance of the pedals with the touch of a button. As you exercise, the console will display continuous exercise feedback. You can also measure your heart rate using the handgrip pulse sensor or the optional chest pulse sensor.

The console also offers the following workouts:

Eight preset workouts that automatically change the resistance of the pedals while guiding you through an effective workout.

Eight calorie goal workouts designed to help you burn a set number of calories. Each workout automatically controls the resistance of the pedals while counting the approximate number of calories you burn.

The console also features the iFit interactive workout system, which enables the console to accept iFit cards containing workouts designed to help you achieve specific fitness goals. For example, lose unwanted pounds with the 8-week Weight Loss workout.

iFit workouts control the resistance of the pedals while the voice of a personal trainer coaches you through your workouts. iFit cards are available separately. **To purchase iFit cards, go to www.iFit.com or call the telephone number on the front cover of this manual. iFit cards are also available at select stores.**

You can even connect your MP3 player or CD player to the console sound system and listen to your favorite music or audio books while you exercise.

To use the manual mode, see page 17. **To use a preset workout,** see page 19. **To use a calorie goal workout,** see page 20. **To use an iFit workout,** see page 21. **To use the sound system,** see page 21. **To change console settings,** see page 22.

Note: Before using the console, make sure that batteries are installed (see assembly step 12 on page 11). If there is a sheet of plastic on the display, remove the plastic.

HOW TO USE THE MANUAL MODE

1. **Begin pedaling or press any button on the console to turn on the console.**

   A moment after you begin pedaling or press a button, the display will light.

2. **Select the manual mode.**

   Each time you turn on the console, the manual mode will be selected. If you have selected a workout, reselect the manual mode by pressing the Workouts button repeatedly until zeros appear in the display.

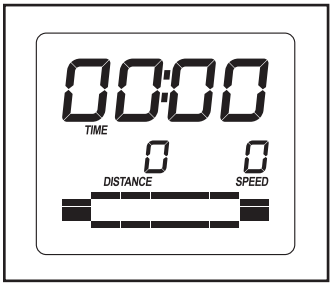

3. **Change the resistance of the pedals as desired.**

   As you pedal, change the resistance of the pedals by pressing the Digital Resistance increase and decrease buttons. Note: After you press the buttons, it will take a moment for the pedals to reach the selected resistance level.

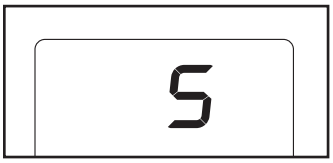

4. **Follow your progress with the display.**

   The lower left display—As you exercise, the lower left display can show the elapsed time and the distance (total number of revolutions) that you have pedaled. Note: When a preset workout is selected, the display will show the time remaining in the workout instead of the elapsed time.

The lower right display—The lower right display can show your pedaling speed in revolutions per minute (rpm) and the approximate number of calories that you have burned. Note: When a calorie goal workout is selected, the display will count down the number of calories to be burned.

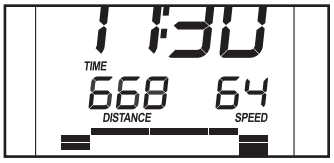

The display also shows your heart rate when you use the handgrip pulse sensor or the optional chest pulse sensor (see step 5 on page 18).

The upper display—The upper display can show the elapsed time, the distance that you have pedaled, your pedaling speed, and the approximate number of calories you have burned.

Press the Priority Display button repeatedly until the upper display shows the information that you are most interested in viewing. Note: While information is shown in the upper display, the same information will not be shown in the lower left or lower right display.

The lower display—The lower display will show a track representing 640 revolutions (1/4 mile or 400 meters). As you exercise, indicators will appear in succession around the track until the entire track appears. The track will then disappear and the indicators will again begin to appear in succession.

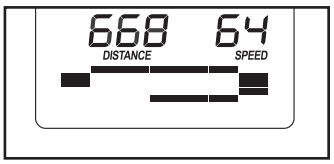

Adjust the volume level of the console by pressing the Volume increase and decrease buttons.

5. **Measure your heart rate if desired.**

You can measure your heart rate using either the handgrip pulse sensor or the optional chest pulse sensor (see page 22 for information about the optional chest pulse sensor).

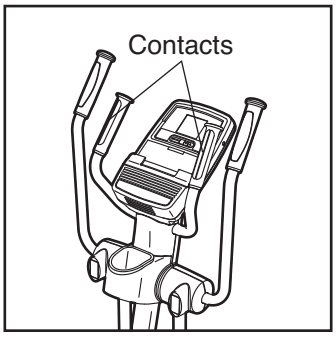

If there are sheets of plastic on the metal contacts on the handgrip pulse sensor, remove the plastic. To measure your heart rate, hold the handgrip pulse sensor with your palms resting against the metal contacts for approximately ten seconds. **Avoid moving your hands or gripping the contacts tightly.**

When your pulse is detected, a flashing heart symbol will appear in the display, and then your heart rate will appear. For the most accurate heart rate reading, hold the contacts for at least 15 seconds. Note: If you continue to hold the handgrip pulse sensor, the display will show your heart rate for up to 30 seconds.

If the display does not show your heart rate, make sure that your hands are positioned as described. Be careful not to move your hands excessively or to squeeze the metal contacts tightly. For optimal performance, clean the metal contacts using a soft cloth; **never use alcohol, abrasives, or chemicals to clean the contacts.**

6. **Turn on the fan if desired.**

Press the Coolaire Fan button repeatedly to turn on the fan or to turn off the fan. Note: If the pedals do not move for about thirty seconds, the fan will turn off automatically.

7. **When you are finished exercising, the console will turn off automatically.**

If the pedals do not move for several seconds, a tone will sound and the console will pause.

If the pedals do not move for several minutes and the buttons are not pressed, the console will turn off and the display will be reset.

HOW TO USE A PRESET WORKOUT

1. **Begin pedaling or press any button on the console to turn on the console.**

   See step 1 on page 17.

2. **Select a preset workout.**

   To select a preset workout, press the Workouts button repeatedly until the name of the desired workout appears in the display. The workout duration and a profile of the resistance levels for the workout will also appear in the display.

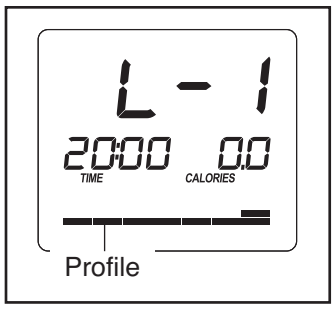

3. **Begin pedaling to start the workout.**

   Each workout is divided into 20 or 30 one-minute segments. One resistance level is programmed for each segment. Note: The same resistance level may be programmed for consecutive segments.

   The resistance level for the first segment will appear in the display for a few seconds. During the workout, the workout profile will show your progress (see the drawing above). The flashing segment of the profile represents the current segment of the workout. The height of the flashing segment indicates the resistance level for the current segment.

   At the end of each segment of the workout, a series of tones will sound and the next segment of the profile will begin to flash. If a different resistance level is programmed for the next segment, the resistance level will appear in the display for a few seconds to alert you. The resistance of the pedals will then change.

   If the resistance level for the current segment is too high or too low, you can manually override the setting by pressing the Digital Resistance buttons. **IMPORTANT: When the current segment of the workout ends, the pedals will automatically adjust to the resistance level programmed for the next segment.**

   The workout will continue in this way until the last segment ends. To stop the workout at any time, stop pedaling. A tone will sound and the time will stop counting. To restart the workout, simply resume pedaling.

4. **Follow your progress with the display.**

   See step 4 on page 17.

5. **Measure your heart rate if desired.**

   See step 5 on page 18.

6. **Turn on the fan if desired.**

   See step 6 on page 18.

7. **When you are finished exercising, the console will turn off automatically.**

   See step 7 on page 18.

HOW TO USE A CALORIE GOAL WORKOUT

1. **Begin pedaling or press any button on the console to turn on the console.**

   See step 1 on page 17.

2. **Select a calorie goal workout.**

   To select a calorie goal workout, press the Workouts button repeatedly until the name of the desired workout appears in the display. The number of calories to be burned and a profile of the resistance levels for the workout will also appear in the display.

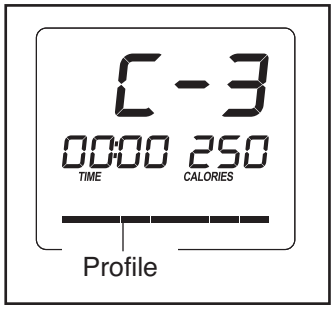

3. **Begin pedaling to start the workout.**

   Each weight loss workout will help you burn approximately 150, 200, 250, 300, 350, 400, 450, or 500 calories. During each workout, the console will count down the approximate number of calories to be burned.

   Each workout is divided into one-minute segments. One resistance level is programmed for each segment. Note: The same resistance level may be programmed for consecutive segments.

   The resistance level for the first segment will appear in the display for a few seconds. During the workout, the workout profile will show your progress (see the drawing above). The flashing segment of the profile represents the current segment of the workout. The height of the flashing segment indicates the resistance level for the current segment.

   At the end of each segment of the workout, a series of tones will sound and the next segment of the profile will begin to flash. If a different resistance level is programmed for the next segment, the resistance level will appear in the display for a few seconds to alert you. The resistance of the pedals will then change.

   If the resistance level for the current segment is too high or too low, you can manually override the setting by pressing the Digital Resistance buttons. **IMPORTANT: When the current segment of the workout ends, the pedals will automatically adjust to the resistance level programmed for the next segment.**

   The workout will continue in this way until you reach the calorie goal and the number of calories to be burned is zero. To stop the workout at any time, stop pedaling. A tone will sound and the time will stop counting. To restart the workout, simply resume pedaling.

   Note: When you reach the calorie goal, the console will stop counting the elapsed time; however, if you continue pedaling, the console will continue to display your pedaling speed and the distance you have pedaled.

4. **Follow your progress with the display.**

   See step 4 on page 17.

5. **Measure your heart rate if desired.**

   See step 5 on page 18.

6. **Turn on the fan if desired.**

   See step 6 on page 18.

7. **When you are finished exercising, the console will turn off automatically.**

   See step 7 on page 18.

HOW TO USE AN IFIT WORKOUT

iFit cards are available separately. To purchase iFit cards, go to www.iFit.com or see the front cover of this manual. iFit cards are also available at select stores.

1. **Begin pedaling or press any button on the console to turn on the console.**

   See step 1 on page 17.

2. **Insert an iFit card and select a workout.**

   To use an iFit workout, insert an iFit card into the iFit slot; make sure that the iFit card is oriented so the metal contacts are face down and are facing the slot. When the iFit card is properly inserted, the indicator next to the slot will light and words will appear in the display.

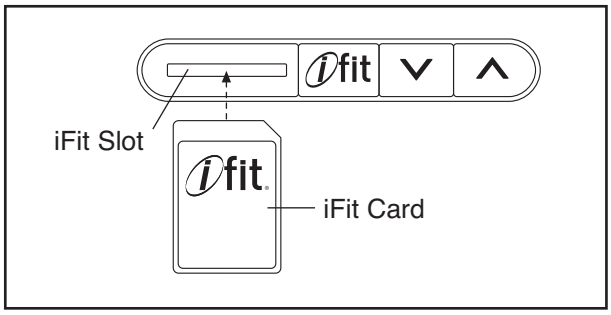

   Next, select the desired workout on the iFit card by pressing the increase and decrease buttons next to the iFit slot.

   A moment after you select a workout, the voice of a personal trainer will begin guiding you through your workout. iFit workouts function in the same way as preset workouts. To use the workout, see steps 3 to 7 on page 19.

3. **When you are finished exercising, remove the iFit card.**

   Remove the iFit card when you are finished exercising. Store the iFit card in a secure place.

HOW TO USE THE SOUND SYSTEM

To play music or audio books through the console's sound system while you exercise, plug the audio cable into the jack on the console and into a jack on your MP3 player or CD player; **make sure that the audio cable is fully plugged in.**

Next, press the Play button on your MP3 player or CD player. Adjust the volume level using the volume control on your MP3 player or CD player or press the Volume increase and decrease buttons on the console.

HOW TO CHANGE CONSOLE SETTINGS

The console features a user mode that allows you to select a backlight option for the console and to view console usage information.

1. **Select the user mode.**

   To select the user mode, press and hold down the Priority Display button for a few seconds until the user mode information appears in the display.

2. **Select a backlight option if desired.**

   The console has three backlight options. The ON option keeps the backlight on while the console is on. The AUTO option keeps the backlight on only while you are pedaling. The OFF option turns the backlight off.

   The upper display will show the currently selected backlight option. Press the Digital Resistance decrease button repeatedly to select the desired backlight option.

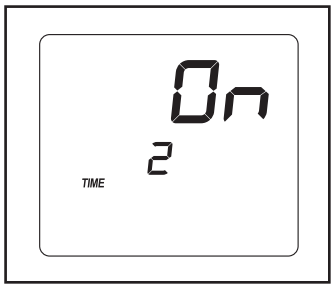

3. **View console usage information if desired.**

   The lower left display will show the total number of hours that the console has been used since the elliptical was purchased.

4. **Exit the user mode.**

   Press the Priority Display button to save the console settings and exit the user mode.

THE OPTIONAL CHEST PULSE SENSOR

The optional chest pulse sensor provides hands-free operation and continuously monitors your heart rate during your workouts. **To purchase the optional chest pulse sensor, please see the front cover of this manual.**

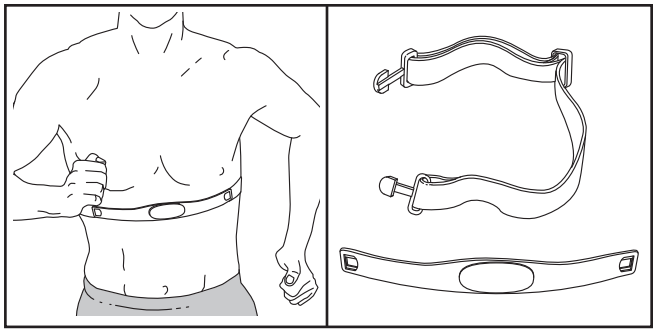

MAINTENANCE AND TROUBLESHOOTING

Inspect and tighten all parts of the elliptical regularly. Replace any worn parts immediately.

To clean the elliptical, use a damp cloth and a small amount of mild soap. **IMPORTANT: To avoid damage to the console, keep liquids away from the console and keep the console out of direct sunlight.**

CONSOLE TROUBLESHOOTING

If the console display becomes dim, the batteries should be replaced; most console problems are the result of low batteries. See assembly step 12 on page 11 for replacement instructions.

If the console does not display your heart rate when you use the handgrip pulse sensor, see step 5 on page 18.

HOW TO ADJUST THE REED SWITCH

If the console does not display correct feedback, the reed switch should be adjusted.

To adjust the reed switch, you must first remove the Top Shield (20). Using a flat screwdriver, release the tabs on the front and rear of the Top Shield and then remove the Top Shield.

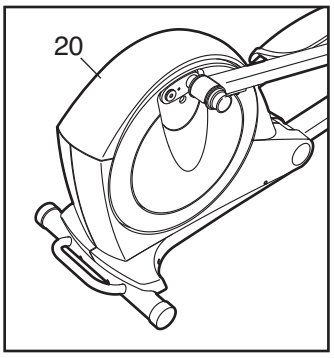

Next, locate the Reed Switch (69). Loosen, but do not remove, the M4 x 16mm Screw (93).

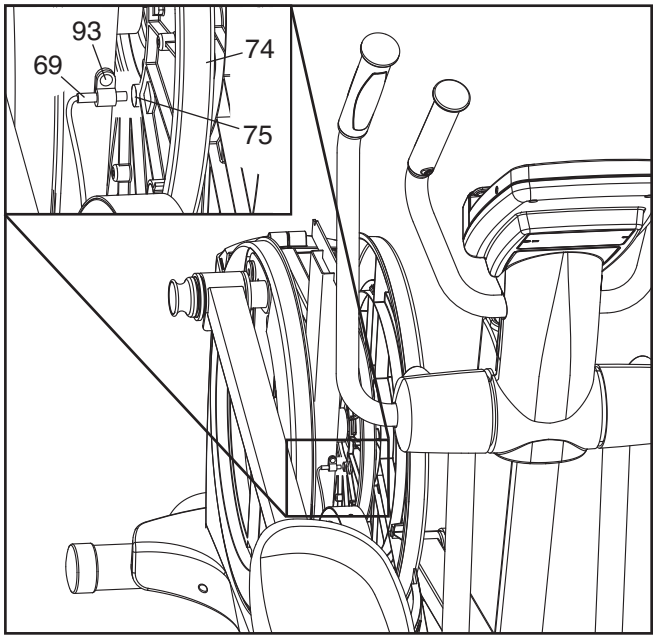

Next, rotate the Large Pulley (74) until a Magnet (75) is aligned with the Reed Switch (69). Slide the Reed Switch slightly toward or away from the Magnet. Then, retighten the M4 x 16mm Screw (93).

Rotate the Large Pulley (74) for a moment. Repeat these actions until the console displays correct feedback.

When the reed switch is correctly adjusted, reattach the top shield.

HOW TO ADJUST THE DRIVE BELT

If you can feel the pedals slip while you are pedaling, even when the resistance is adjusted to the highest level, the drive belt may need to be adjusted.

To adjust the drive belt, you must remove the top shield and the left shield (see the instructions below).

Using a flat screwdriver, release the tabs on the front and rear of the Top Shield (20) and then remove the Top Shield.

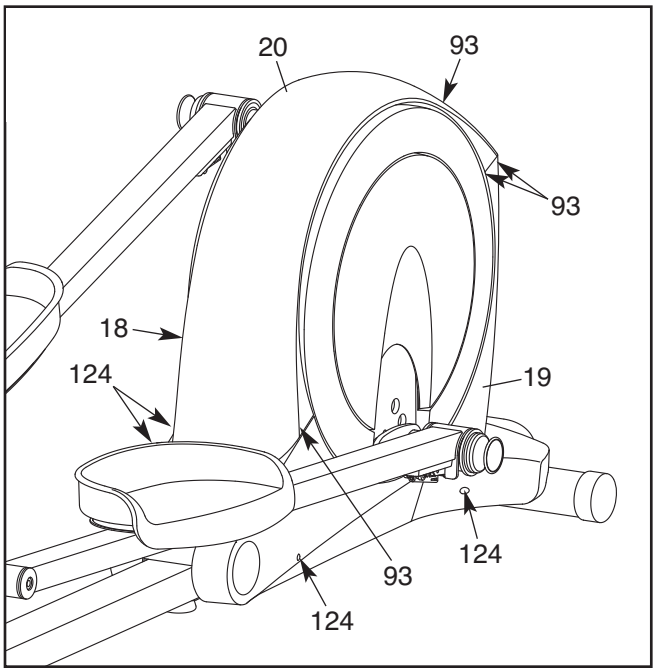

Next, remove the M4 x 16mm Screws (93) and the M4 x 42mm Screws (124) from the Right and Left Shields (18, 19). **Make sure to note which size of Screw you remove from each hole.** Then, gently remove the Left Shield.

Loosen the Pivot Screw (97). Then, tighten the Belt Adjustment Screw (85) until the Drive Belt (38) is tight.

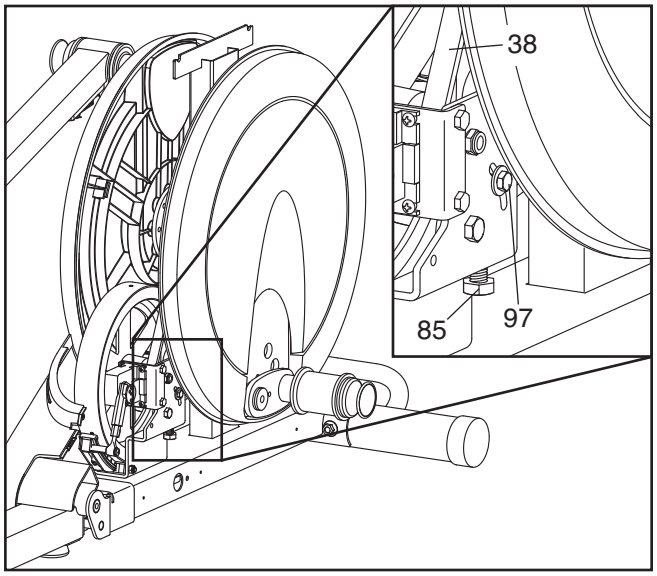

When the Drive Belt (38) is tight, tighten the Pivot Screw (97).

Then, reattach the left shield and the top shield.

EXERCISE GUIDELINES

⚠ WARNING: Before beginning this or any exercise program, consult your physician. This is especially important for persons over age 35 or persons with pre-existing health problems.

The pulse sensor is not a medical device. Various factors may affect the accuracy of heart rate readings. The pulse sensor is intended only as an exercise aid in determining heart rate trends in general.

These guidelines will help you to plan your exercise program. For detailed exercise information, obtain a reputable book or consult your physician. Remember, proper nutrition and adequate rest are essential for successful results.

EXERCISE INTENSITY

Whether your goal is to burn fat or to strengthen your cardiovascular system, exercising at the proper intensity is the key to achieving results. You can use your heart rate as a guide to find the proper intensity level. The chart below shows recommended heart rates for fat burning and aerobic exercise.

165	*155*	*145*	*140*	*130*	*125*	*115*	♥
145	*138*	*130*	*125*	*118*	*110*	*103*	♥
125	*120*	*115*	*110*	*105*	*95*	*90*	♥
20	*30*	*40*	*50*	*60*	*70*	*80*	

To find the proper intensity level, find your age at the bottom of the chart (ages are rounded off to the nearest ten years). The three numbers listed above your age define your "training zone." The lowest number is the heart rate for fat burning, the middle number is the heart rate for maximum fat burning, and the highest number is the heart rate for aerobic exercise.

Burning Fat—To burn fat effectively, you must exercise at a low intensity level for a sustained period of time. During the first few minutes of exercise, your body uses *carbohydrate calories* for energy. Only after the first few minutes of exercise does your body begin to use stored *fat calories* for energy. If your goal is to burn fat, adjust the intensity of your exercise until your heart rate is near the lowest number in your training zone. For maximum fat burning, exercise with your heart rate near the middle number in your training zone.

Aerobic Exercise—If your goal is to strengthen your cardiovascular system, you must perform aerobic exercise, which is activity that requires large amounts of oxygen for prolonged periods of time. For aerobic exercise, adjust the intensity of your exercise until your heart rate is near the highest number in your training zone.

WORKOUT GUIDELINES

Warming Up—Start with 5 to 10 minutes of stretching and light exercise. A warm-up increases your body temperature, heart rate, and circulation in preparation for exercise.

Training Zone Exercise—Exercise for 20 to 30 minutes with your heart rate in your training zone. (During the first few weeks of your exercise program, do not keep your heart rate in your training zone for longer than 20 minutes.) Breathe regularly and deeply as you exercise–never hold your breath.

Cooling Down—Finish with 5 to 10 minutes of stretching. Stretching increases the flexibility of your muscles and helps to prevent post-exercise problems.

EXERCISE FREQUENCY

To maintain or improve your condition, complete three workouts each week, with at least one day of rest between workouts. After a few months of regular exercise, you may complete up to five workouts each week, if desired. Remember, the key to success is to make exercise a regular and enjoyable part of your everyday life.

SUGGESTED STRETCHES

The correct form for several basic stretches is shown at the right. Move slowly as you stretch—never bounce.

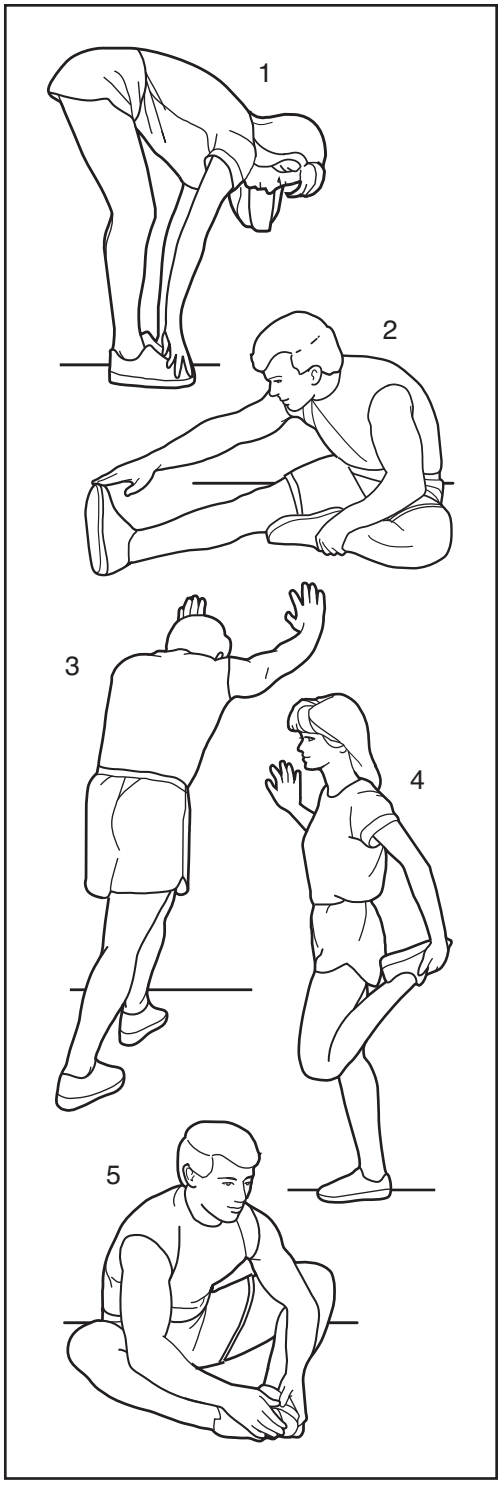

1. Toe Touch Stretch

Stand with your knees bent slightly and slowly bend forward from your hips. Allow your back and shoulders to relax as you reach down toward your toes as far as possible. Hold for 15 counts, then relax. Repeat 3 times. Stretches: Hamstrings, back of knees and back.

2. Hamstring Stretch

Sit with one leg extended. Bring the sole of the opposite foot toward you and rest it against the inner thigh of your extended leg. Reach toward your toes as far as possible. Hold for 15 counts, then relax. Repeat 3 times for each leg. Stretches: Hamstrings, lower back and groin.

3. Calf/Achilles Stretch

With one leg in front of the other, reach forward and place your hands against a wall. Keep your back leg straight and your back foot flat on the floor. Bend your front leg, lean forward and move your hips toward the wall. Hold for 15 counts, then relax. Repeat 3 times for each leg. To cause further stretching of the achilles tendons, bend your back leg as well. Stretches: Calves, achilles tendons and ankles.

4. Quadriceps Stretch

With one hand against a wall for balance, reach back and grasp one foot with your other hand. Bring your heel as close to your buttocks as possible. Hold for 15 counts, then relax. Repeat 3 times for each leg. Stretches: Quadriceps and hip muscles.

5. Inner Thigh Stretch

Sit with the soles of your feet together and your knees outward. Pull your feet toward your groin area as far as possible. Hold for 15 counts, then relax. Repeat 3 times. Stretches: Quadriceps and hip muscles.

NOTES

PART LIST

Model No. PFEVEL95910.1 R0111A

Key No.	Qty.	Description
1	1	Frame
2	1	Folding Frame
3	1	Front Stabilizer
4	1	Rear Stabilizer
5	1	Upright
6	1	Right Upper Body Leg
7	1	Left Upper Body Leg
8	1	Right Upper Body Arm
9	1	Left Upper Body Arm
10	1	Right Handlebar
11	1	Left Handlebar
12	1	Right Pedal Arm
13	1	Left Pedal Arm
14	1	Right Pedal
15	1	Left Pedal
16	2	Disc
17	2	Disc Cover
18	1	Right Shield
19	1	Left Shield
20	1	Top Shield
21	1	Right Frame Cover
22	1	Left Frame Cover
23	1	Top Cover
24	1	Rear Upright Cover
25	1	Front Upright Cover
26	1	Water Bottle Holder
27	2	Inner Leg Cover
28	2	Outer Leg Cover
29	1	Right Rear Leg Cover
30	1	Right Front Leg Cover
31	1	Left Rear Leg Cover
32	1	Left Front Leg Cover
33	1	Console
34	2	Pulse Sensor/Wire
35	2	Handgrip
36	2	Wheel
37	4	Stabilizer Cap
38	1	Drive Belt
39	1	Right Crank Arm
40	1	Left Crank Arm
41	1	Leveling Foot
42	1	Latch Bracket
43	2	Adjustment Arm
44	2	Adjustment Pin
45	2	Adjustment Knob
46	2	Adjustment Sleeve
47	4	Sleeve Bushing
48	1	Upright Axle
49	2	Latch Housing
50	2	Latch
51	2	Latch Spring
52	2	Latch Insert
53	2	Adjustment Arm Spring
54	4	Leg Bearing Assembly
55	2	Leg Spacer
56	2	Axle Cover
57	2	Upright Bushing
58	4	Pedal Arm Bushing
59	1	Audio Cable
60	1	Wire Harness
61	1	Flywheel
62	1	6000ZZ Bearing
63	1	Frame Axle
64	2	Frame Bushing
65	1	Latch Bracket Axle
66	1	Latch Bracket Spring
67	1	Latch Button
68	1	Button Housing
69	1	Reed Switch/Wire
70	1	Clamp
71	1	Crank Hub
72	1	Crank
73	1	Crank Spacer
74	1	Large Pulley
75	2	Magnet
76	2	Folding Frame Bearing
77	1	Idler
78	1	Resistance Motor
79	1	Resistance Arm
80	1	Resistance Wheel
81	1	Adjustment Bracket
82	1	Motor Bracket
83	1	C-magnet Bracket
84	1	Flywheel Axle
85	1	Belt Adjustment Screw
86	12	M8 x 28mm Patch Screw
87	2	Small Snap Ring
88	1	C-magnet Bracket Bolt
89	4	Resistance Motor Screw
90	1	M5 x 7mm Screw
91	1	M3.5 x 12mm Screw
92	1	M6 Locknut
93	33	M4 x 16mm Screw
94	2	M8 Jam Nut
95	1	Ground Screw
96	1	M6 Washer
97	1	Pivot Screw
98	2	Motor Bracket Screw
99	1	Idler Bolt
100	4	M10 x 80mm Patch Screw

Key No.	Qty.	Description
101	1	Anchored Zip Tie
102	16	M8 x 16mm Patch Screw
103	14	M8 Split Washer
104	2	M10 x 60mm Button Screw
105	2	M10 Locknut
106	2	Short C-pin
107	2	M10 x 25mm Button Screw
108	2	M10 x 32mm Washer
109	2	M8 x 16mm Button Screw
110	4	M8 x 23.5mm x 1mm Washer
111	8	M6 x 12mm Patch Screw
112	8	M6 Split Washer
113	2	M8 x 18mm Button Screw
114	2	M8 x 32mm Washer
115	2	Large Wave Washer
116	2	Large Snap Ring

Key No.	Qty.	Description
117	5	M4 x 19mm Flat Head Screw
118	2	Small Wave Washer
119	2	Medium Wave Washer
120	2	M8 x 16mm x 2mm Washer
121	2	M8 x 23mm Shoulder Patch Screw
122	1	3/8" x 1" Flange Screw
123	4	M10 Split Washer
124	4	M4 x 42mm Screw
125	4	M4 x 42mm Flat Head Screw
126	2	M8 x 23mm x 2mm Washer
127	2	Long C-pin
128	1	Bracket Snap Ring
129	1	M5 Washer
130	2	Adjustment Nut
*	–	User’s Manual
*	–	Assembly Tool

Note: Specifications are subject to change without notice. For information about ordering replacement parts, see the back cover of this manual. *These parts are not illustrated.

EXPLODED DRAWING A

Model No. PFEVEL95910.1 R0111A

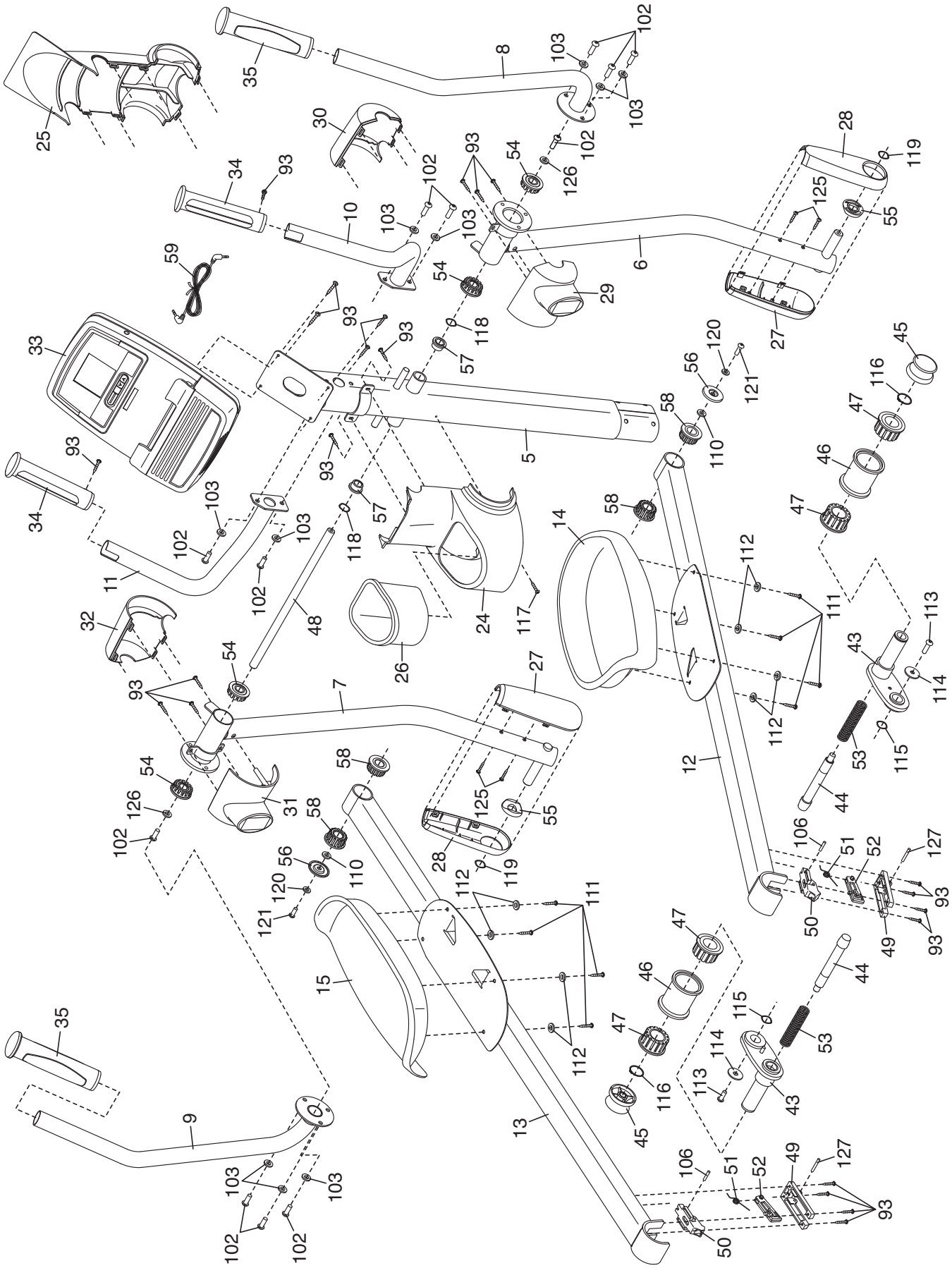

EXPLODED DRAWING B

Model No. PFEVEL95910.1 R0111A

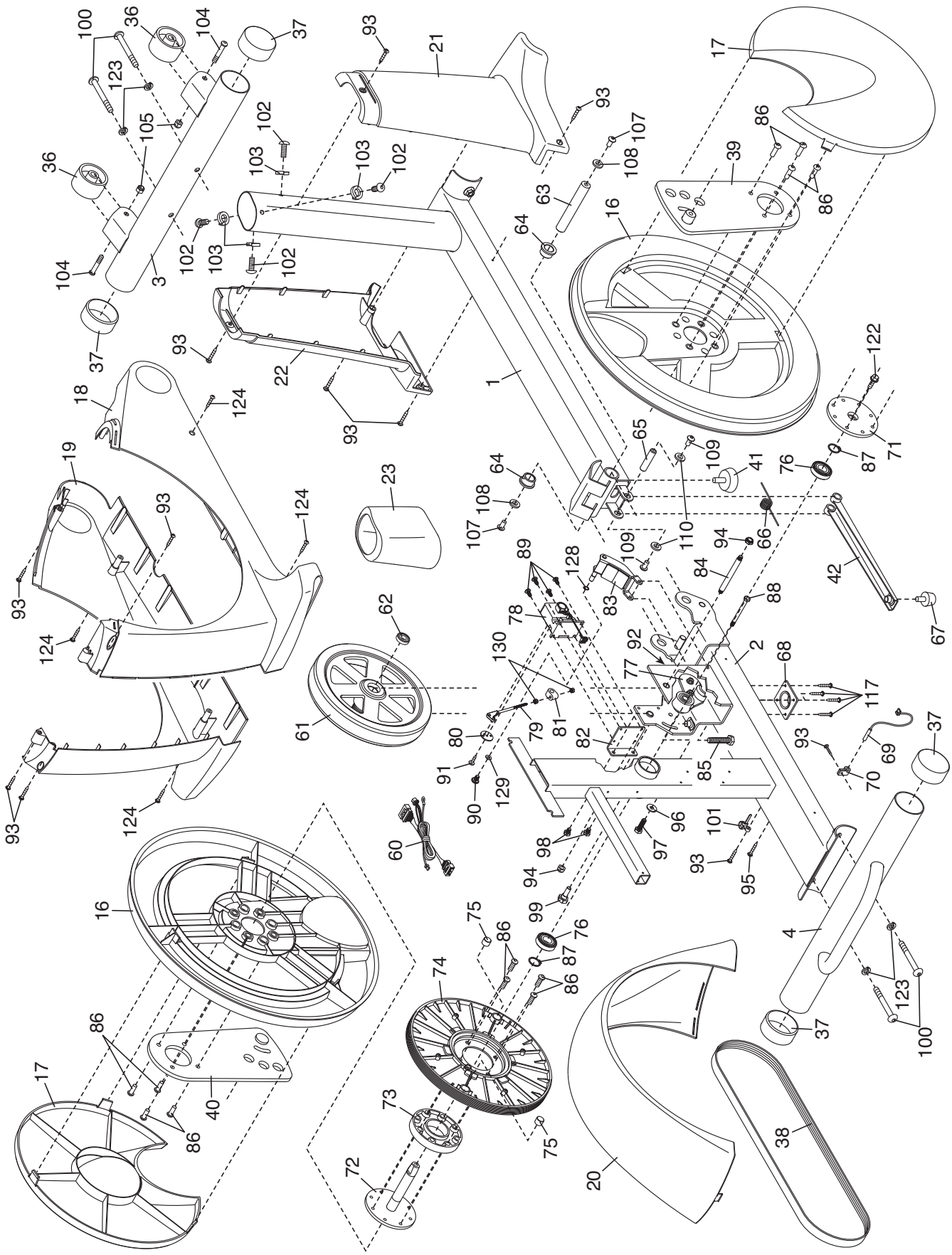

ORDERING REPLACEMENT PARTS

To order replacement parts, see the front cover of this manual. To help us assist you, please be prepared to provide the following information when contacting us:

- the model number and serial number of the product (see the front cover of this manual)
- the name of the product (see the front cover of this manual)
- the key number and description of the replacement part(s) (see the PART LIST and the EXPLODED DRAWING near the end of this manual)

RECYCLING INFORMATION

This electronic product must not be disposed of in municipal waste. To preserve the environment, this product must be recycled after its useful life as required by law.

Please use recycling facilities that are authorized to collect this type of waste in your area. In doing so, you will help to conserve natural resources and improve European standards of environmental protection. If you require more information about safe and correct disposal methods, please contact your local city office or the establishment where you purchased this product.

Part No. 307585 R0111A

Printed in China © 2011 ICON IP, Inc.