LC-5500
EXERCISE BIKE

GE09-00006-XXXX

SN 50000 - 519921

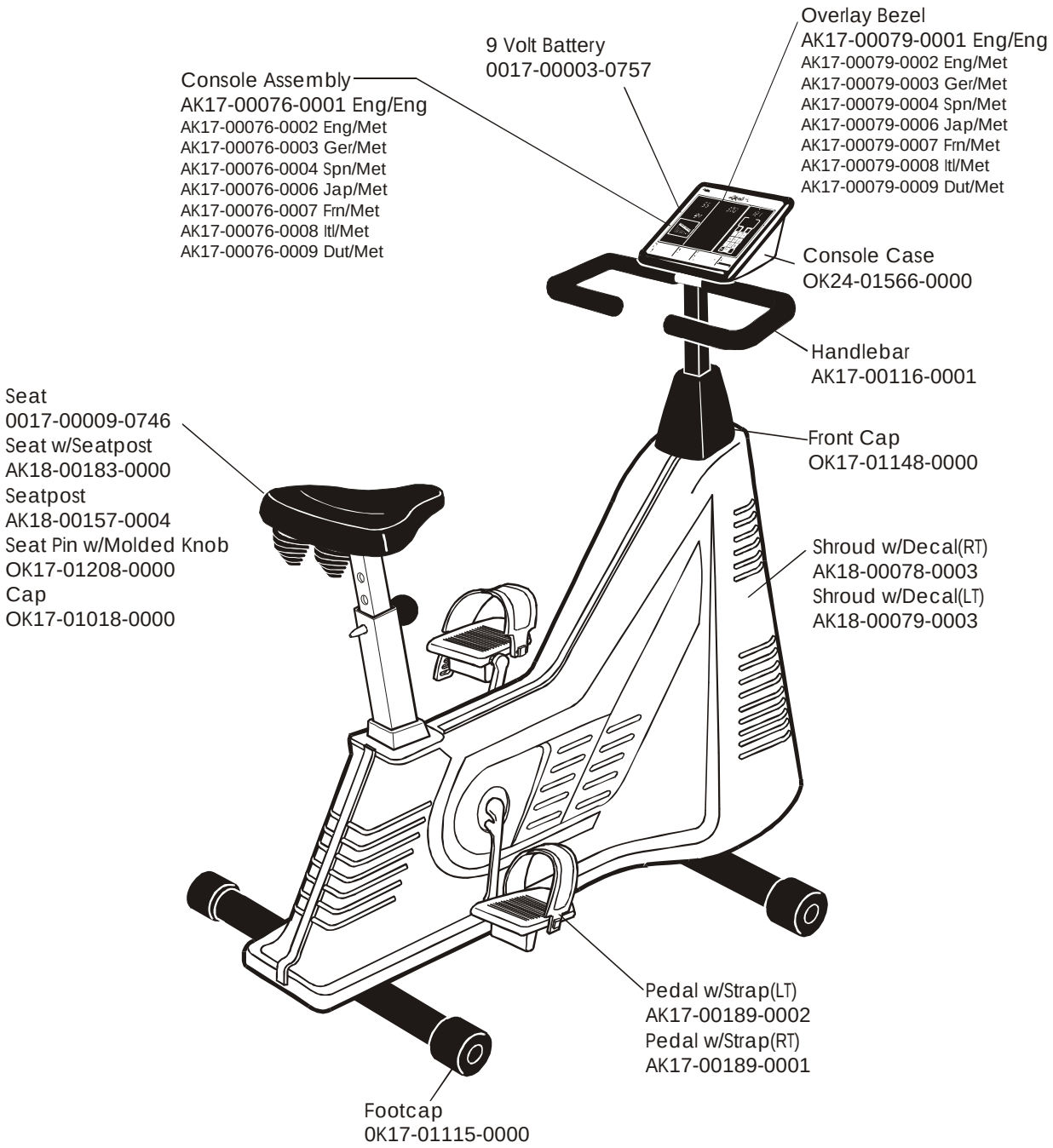

Revision Date: 9/26/00

LC-5500
EXERCISE BIKE

GE09-00006-XXXX

SN 50000 - 519921

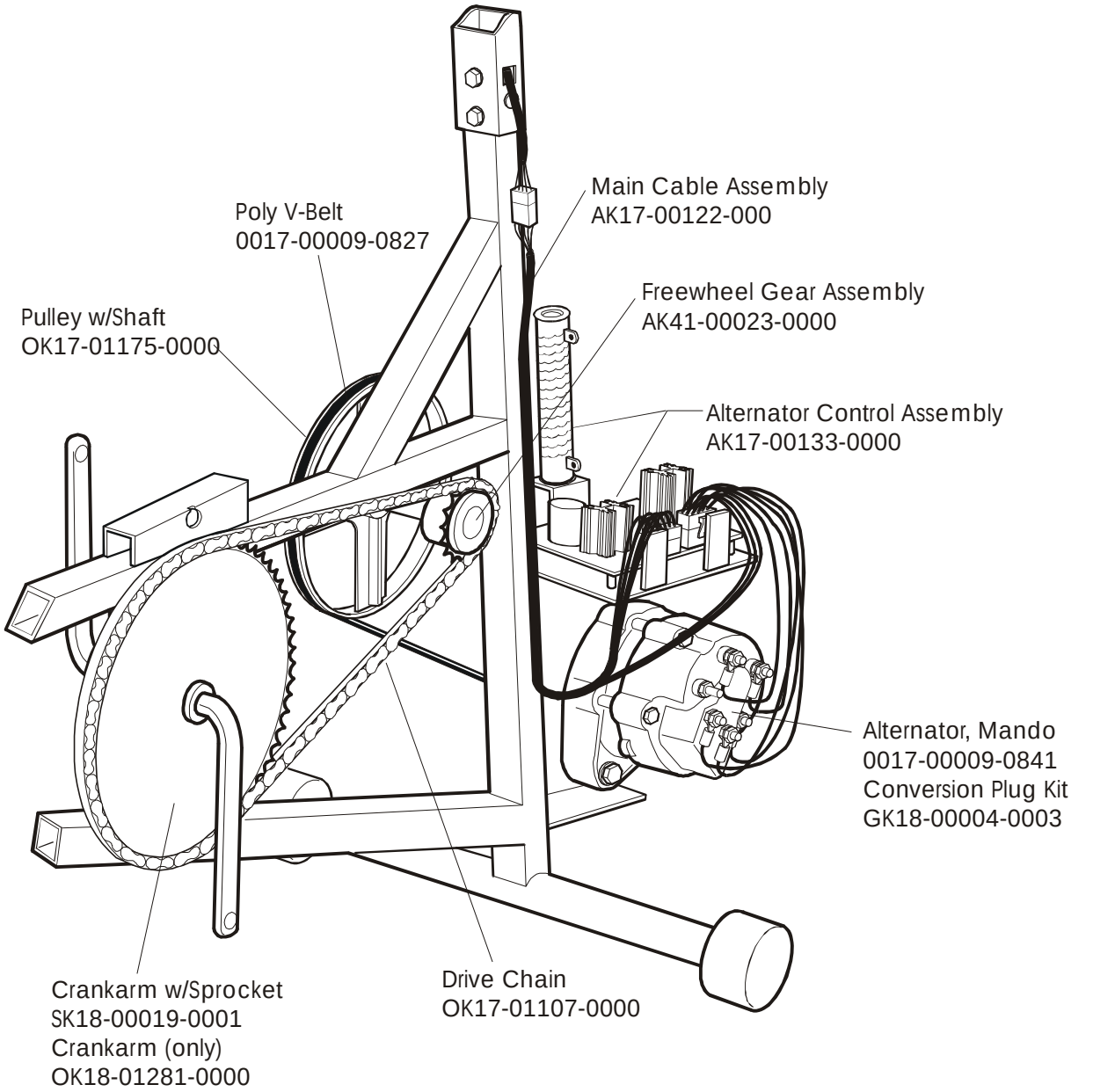

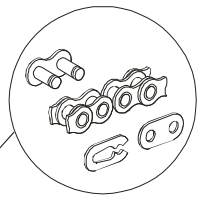

Master Link Assembly
GK18-00004-0002

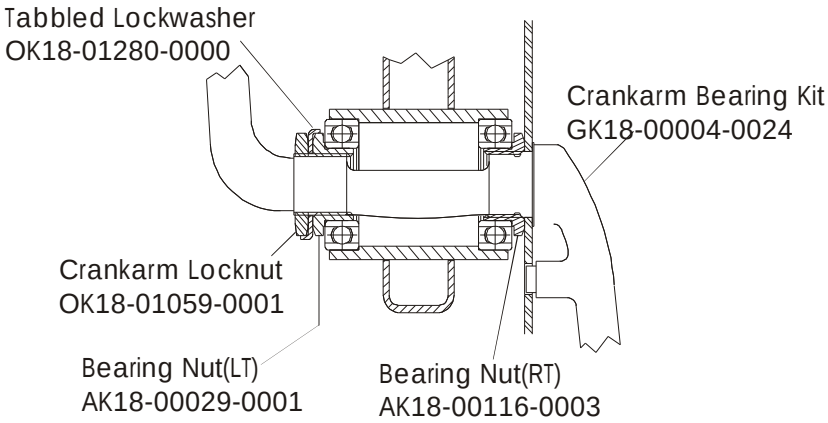

Revision Date: 9/26/00