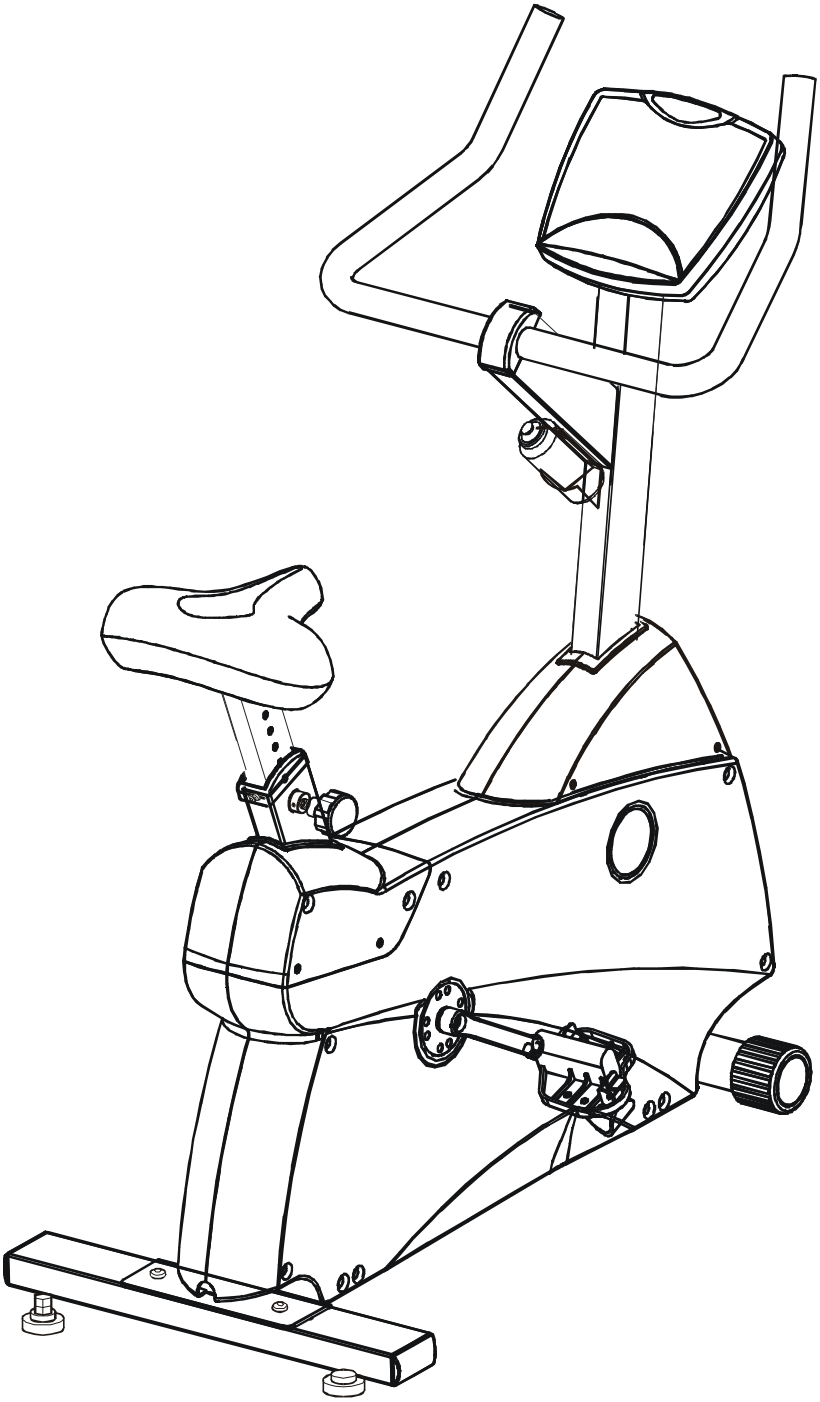

Example of a starting Serial # SU30060210000001			
SU30	06	0210	000001
Model #	Plant #	Year/month	Serial Number

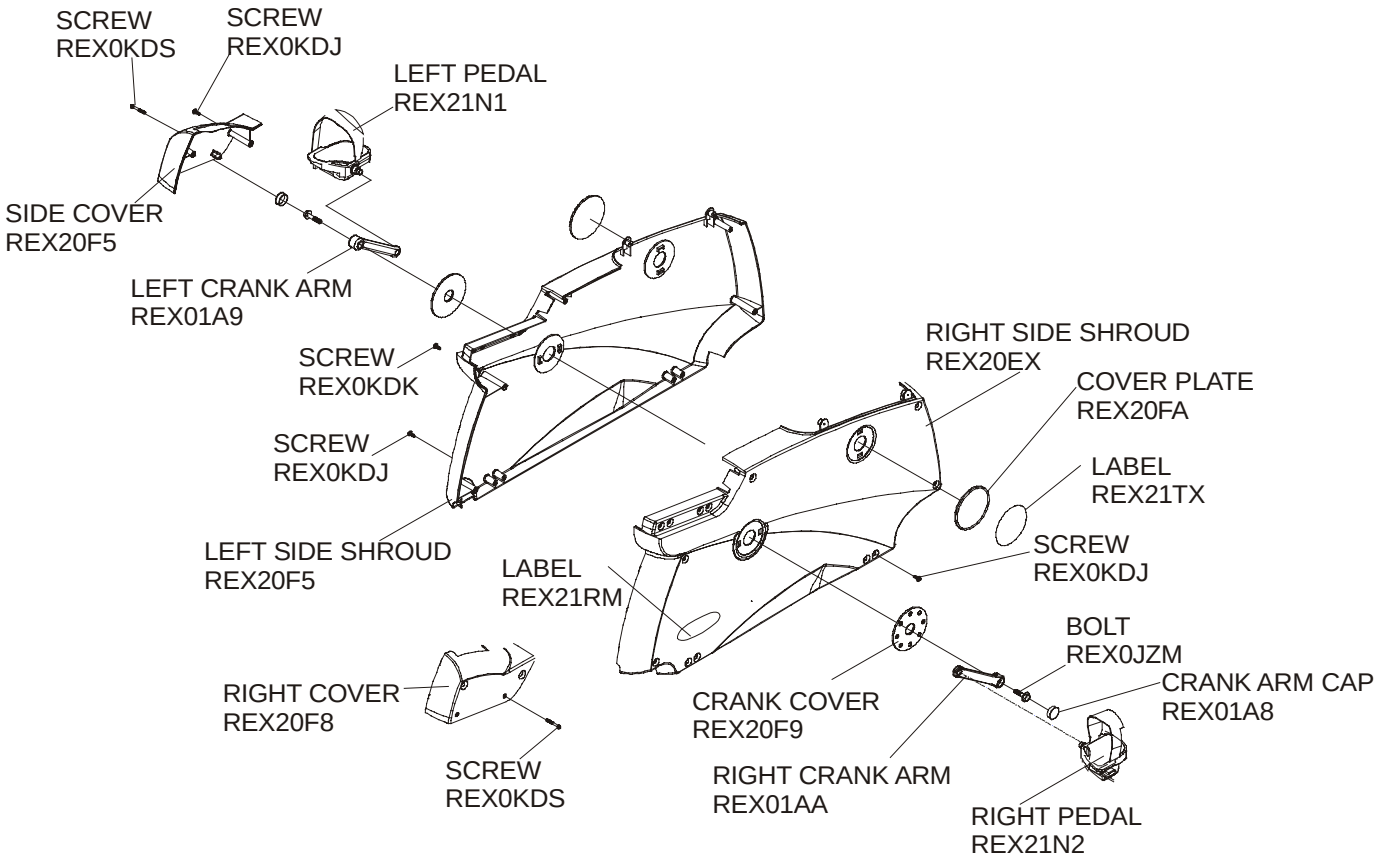
SCREW
REX0KDS
SCREW
REX0KDJ
LEFT PEDAL
REX21N1
SIDE COVER
REX20F5
LEFT CRANK ARM
REX01A9
SCREW
REX0KDK
SCREW
REX0KDJ
LEFT SIDE SHROUD
REX20F5
RIGHT SIDE SHROUD
REX20EX
COVER PLATE
REX20FA
LABEL
REX21TX
SCREW
REX0KDJ
LABEL
REX21RM
BOLT
REX0JZM
CRANK ARM CAP
REX01A8
RIGHT COVER
REX20F8
CRANK COVER
REX20F9
SCREW
REX0KDS
RIGHT CRANK ARM
REX01AA
RIGHT PEDAL
REX21N2

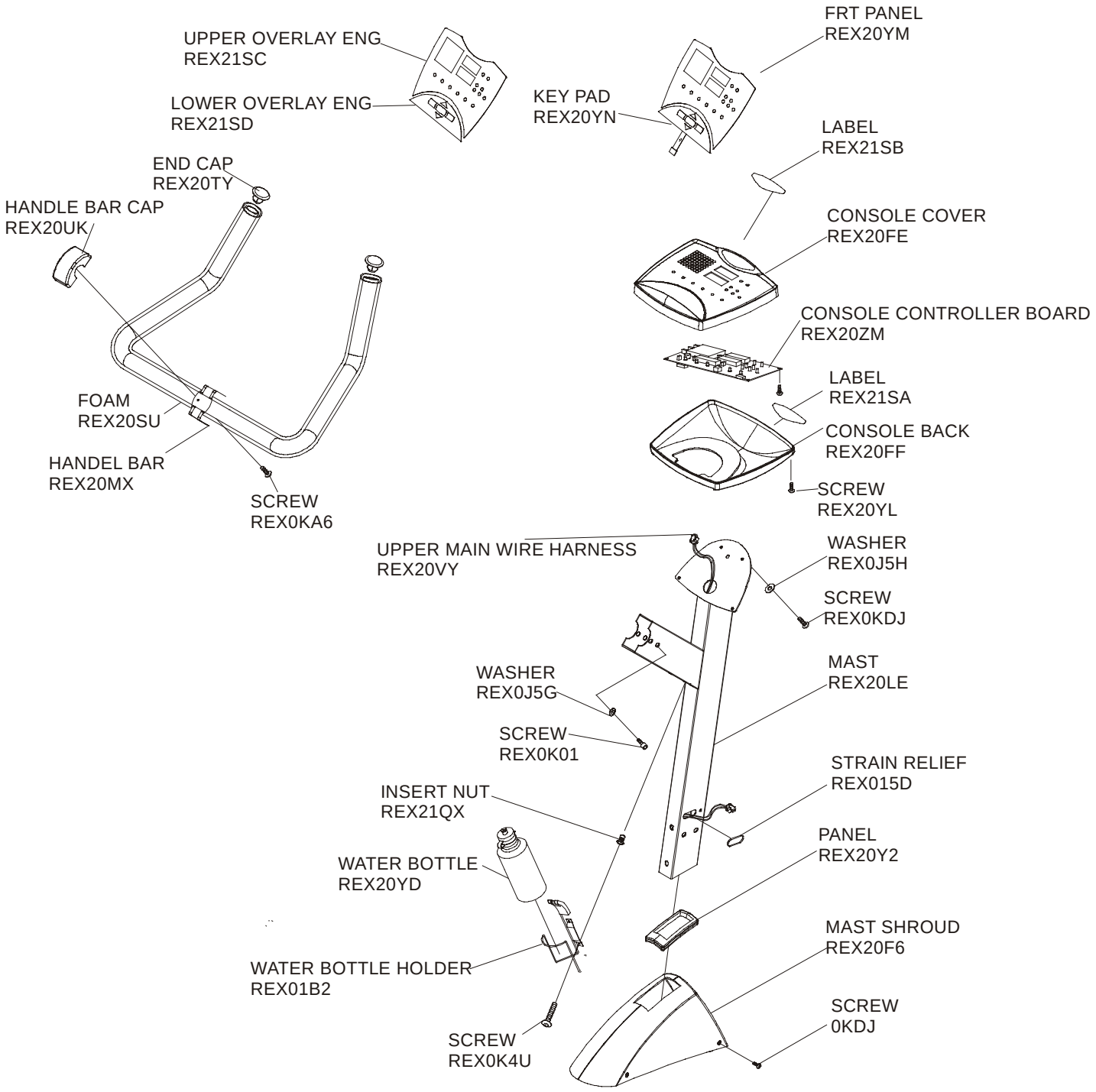
UPPER OVERLAY ENG
REX21SC
LOWER OVERLAY ENG
REX21SD
FRT PANEL
REX20YM
KEY PAD
REX20YN
LABEL
REX21SB
END CAP
REX20TY
HANDLE BAR CAP
REX20UK
CONSOLE COVER
REX20FE
CONSOLE CONTROLLER BOARD
REX20ZM
LABEL
REX21SA
FOAM
REX20SU
CONSOLE BACK
REX20FF
HANDEL BAR
REX20MX
SCREW
REX20YL
SCREW
REX0KA6
UPPER MAIN WIRE HARNESS
REX20VY
WASHER
REX0J5H
SCREW
REX0KDJ
MAST
REX20LE
WASHER
REX0J5G
SCREW
REX0K01
STRAIN RELIEF
REX015D
INSERT NUT
REX21QX
PANEL
REX20Y2
WATER BOTTLE
REX20YD
MAST SHROUD
REX20F6
WATER BOTTLE HOLDER
REX01B2
SCREW
0KDJ
SCREW
REX0K4U

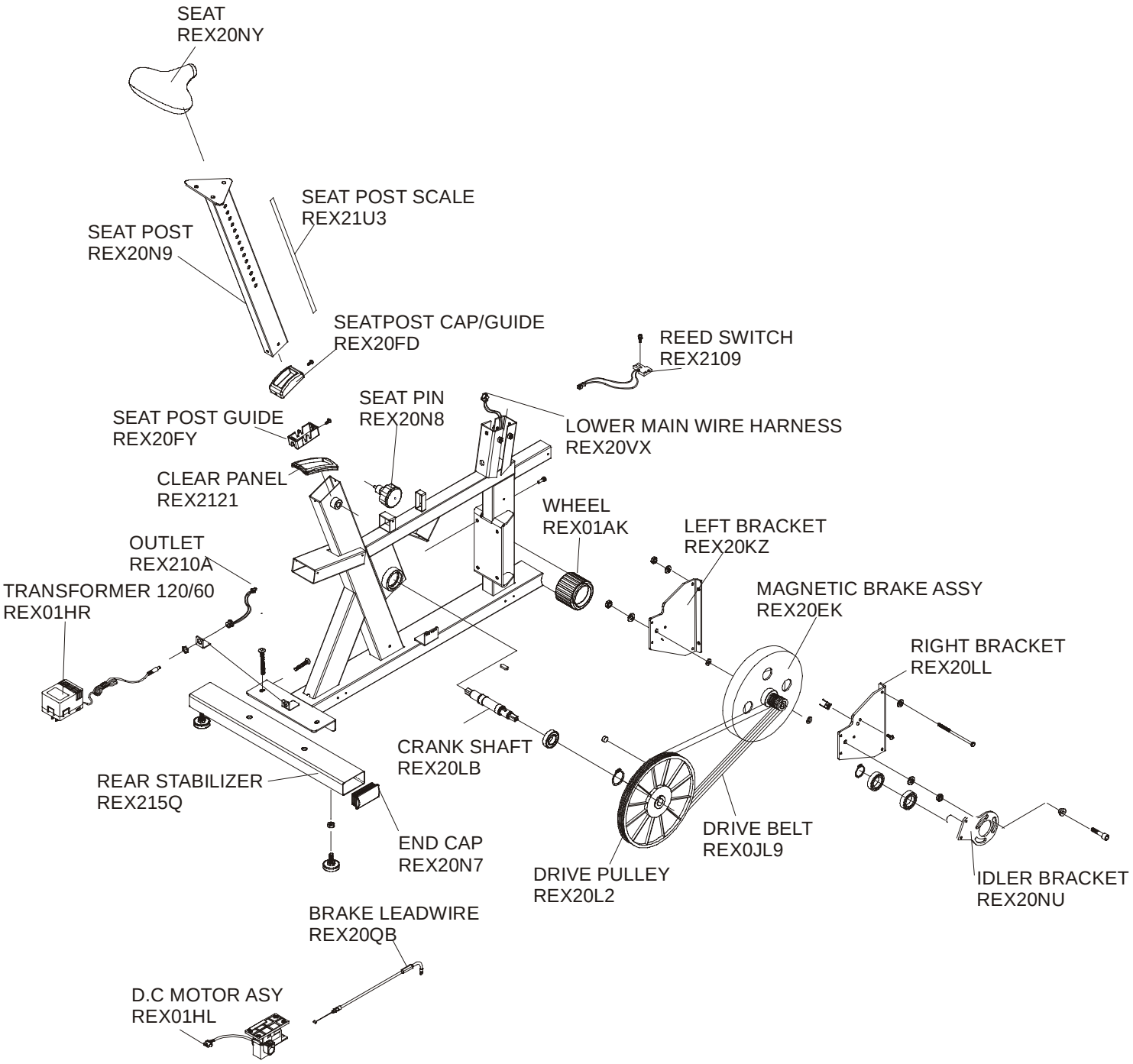
SEAT
REX20NY
SEAT POST SCALE
REX21U3
SEAT POST
REX20N9
SEATPOST CAP/GUIDE
REX20FD
REED SWITCH
REX2109
SEAT PIN
REX20N8
SEAT POST GUIDE
REX20FY
LOWER MAIN WIRE HARNESS
REX20VX
CLEAR PANEL
REX2121
WHEEL
REX01AK
LEFT BRACKET
REX20KZ
OUTLET
REX210A
TRANSFORMER 120/60
REX01HR
MAGNETIC BRAKE ASSY
REX20EK
RIGHT BRACKET
REX20LL
CRANK SHAFT
REX20LB
REAR STABILIZER
REX215Q
END CAP
REX20N7
DRIVE BELT
REX0JL9
DRIVE PULLEY
REX20L2
IDLER BRACKET
REX20NU
BRAKE LEADWIRE
REX20QB
D.C MOTOR ASY
REX01HL

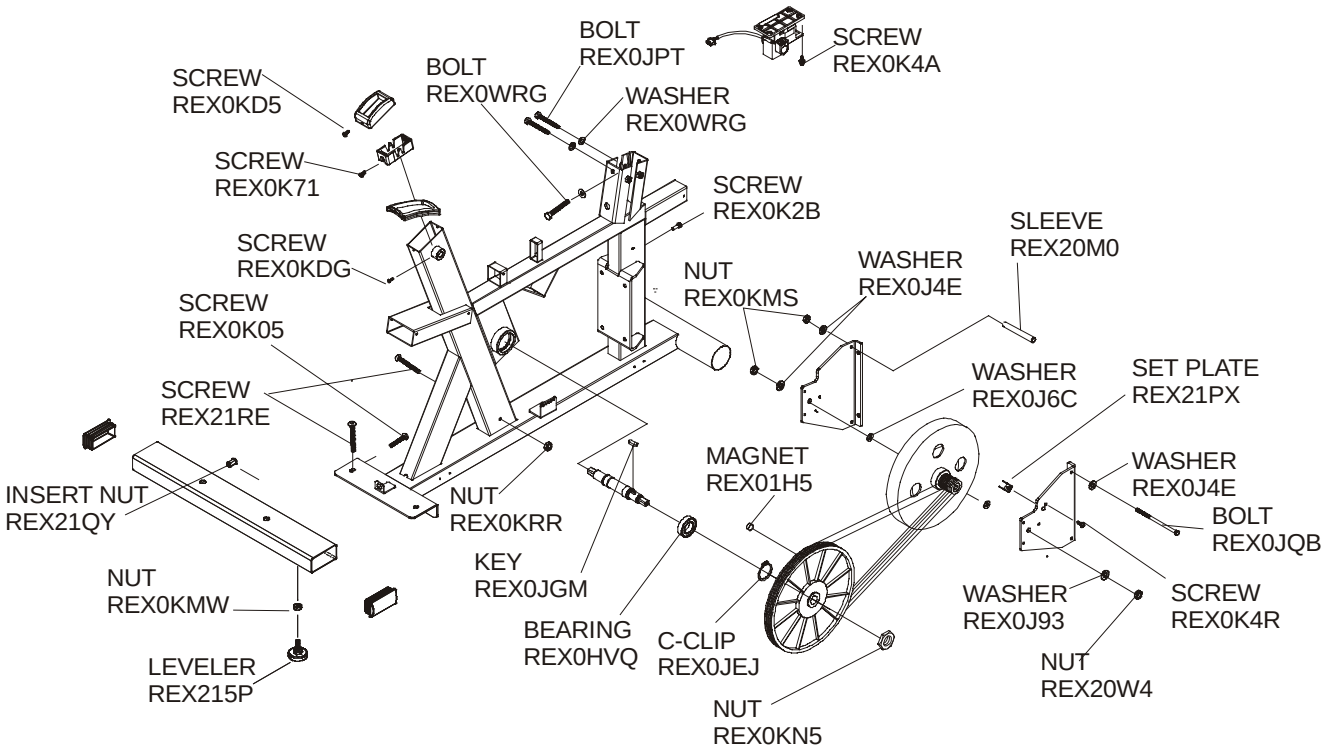
BOLT
REX0JPT
SCREW
REX0K4A
SCREW
REX0KD5
BOLT
REX0WRG
WASHER
REX0WRG
SCREW
REX0K71
SCREW
REX0K2B
SLEEVE
REX20M0
SCREW
REX0KDG
WASHER
REX0J4E
NUT
REX0KMS
SCREW
REX0K05
WASHER
REX0J6C
SET PLATE
REX21PX
SCREW
REX21RE
MAGNET
REX01H5
WASHER
REX0J4E
INSERT NUT
REX21QY
NUT
REX0KRR
BOLT
REX0JQB
KEY
REX0JGM
NUT
REX0KMW
WASHER
REX0J93
SCREW
REX0K4R
BEARING
REX0HVQ
C-CLIP
REX0JEJ
NUT
REX20W4
LEVELER
REX215P
NUT
REX0KN5

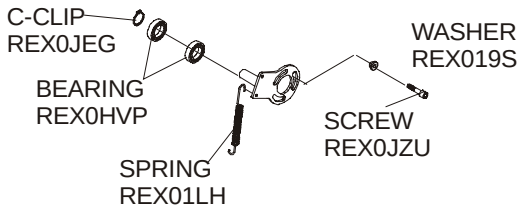
C-CLIP
REX0JEG
WASHER
REX019S
BEARING
REX0HVP
SCREW
REX0JZU
SPRING
REX01LH